BROADCAST
RECEIVERS
SCHEMATICS

Vintage Radio Identification SKETCH-BOOKS of D. H. MOORE

VOLUME II-A

The
Vintage Radio
Foundation®

P.O. BOX 521
PALO ALTO, CALIFORNIA
94302

© D.H.MOORE, 1954/1985

ALL RIGHTS RESERVED UNDER INTERNATIONAL AND PAN-AMERICAN COPYRIGHT CONVENTIONS, INCLUDING TRANSLATION INTO SCANDANAVIAN LANGUAGES. REPRODUCTION IN ANY FORM IS EXPRESSLY FORBIDDEN WITHOUT EXPRESS PERMISSION FROM THE AUTHOR.

TO ADVANCE THE WONDER & THE MAGIC OF EARLY RADIO
THROUGH THE COLLECTION, EVALUATION, & DISSEMINATION
OF INFORMATION.

DEDICATION

....to a way of life
that should not have
been forgotten.

Autographed Edition

It is my sincerest wish that this latest contribution of my vintage radio writings may afford you as much enjoyment and usefulness as I've had in compiling it.

Over to you, and 73,

Palo Alto

Contents

Volume II-A

Introduction..... 1
Reading The Schematics..... 4

Acme AC-3, 1927..... 6
Acme AC4, 1927..... 7
Acme AC-7..... 7
Aero "Chronophase"..... 15
Aero-Dyne TRF, 1926..... 9
Aero Five..... 11
Aerodyne, Improved..... 12
Aero Seven TRF..... 13
Aero 3-Circuit Tuner..... 6
Alden Localised Receiver..... 19
Alden-Somerbridge Rcvr..... 17
Allied/Cisin Find All Four.... 23
Amplidon No. 1..... 26
Amplidyne No. 2..... 27
Am-Rad AC-5 Neutrodyne..... 29
Am-Rad Super Six..... 30
Argus Model B TRF..... 31
Arkay Regenerative, 1925..... 32
Armstrong Shielded Super-Six.. 33
Autodyne Triplex..... 36

Baby 1-Tube Portable..... 37
Benson 3X-Superflex, 1924..... 39
Bernard Audio Basin..... 64
Bernard DX-Superdyne..... 41
Bernard Diamond of the Air.... 44
Bernard 2-Tube DX Receiver.... 40
Best Tuned AF Amplifier..... 66
Bestone V-60 TRF..... 69
Birnach AC-4..... 70
Bodine Twin-8..... 72
Boonton Light Four..... 74
Boonton RF Amplifier..... 73
Bosch Amborola Model 16..... 75
Bosch Model 5..... 77
Bosch Models 28 & 29..... 78
Bruno "77" DX-Wonder..... 84
Bruno Powertone..... 82

General Radio TRF..... 165
Grebe Synchrophase MU-1..... 167
Grimes DC New Yorker..... 170
Grimes Octo-Matic Rcvr..... 168

Hagerman Model 210 AC-6..... 172
Halldorson Screen-Grid 56..... 174
Harkness S.G. DeLuxe..... 181
Hayden AC-Four..... 177
Hayden DX-Four..... 176
Hayden Midget 3 Portable..... 178
H.B. Compact..... 179
Henninger 6 Notation..... 183
Heraldyne TRF..... 184
H*F*L Mastertone..... 185

Karas AC Equamatic..... 187
Karas Knickerbocker Four..... 190
Kennedy 20-B AC Receiver..... 191
Kennedy Short & Long Wave Rcvr. 192

Lodge "N" Receiver..... 195
Loftin-White Principle..... 200
Loftin-White Constant Cpld. Set 201

* * *
* *
*

NOTE:

Volume II-B has its own Table of Contents. For marques not covered here, refer to individual Monographs listed on the back cover, or contact Olde Tyme Radio Co.

* * *
* *
*

Brunotrol/Simpletrol TRF..... 85
Bremer-Tully "Nameless" TRF... 81
B*S*T 6-Tube TRF..... 86

Camfield Super-9..... 87
Capacity-Controlled Regen..... 92
Celco D-Coil Super-Het..... 93
Cisin Dual-Shield Portable.... 95
Cleartone "Goldcrest"..... 97
Cockaday 4-Circuit Regen..... 98
Columbia Screen-Grid Eight.... 100
Crosley XJ Receiver..... 102

Daven AC-5..... 103
Daven Bass-Note Receiver..... 104
Daven Bass-Note Improved..... 112
Day-Fan 5-Tube TRF..... 116

Eagle Neutrodyne..... 119
Edison Models R1, R2, C2..... 120
Electron Labs Multi-Wave..... 121
Electron Model VIII..... 122
Elkay 5-Tube TRF..... 123
Ellis D-Coil TRF..... 127
English 1-Tube Receiver..... 128
Erla "Circuloid" Notation..... 129
Erla Pathfinder Circuits..... 132
Erla S-50/S-51 Notation..... 134
Erla Superflex Five..... 130
Everyman Four..... 135

Fada Special Five, Model 265.. 137
Fada Model 170-A..... 138
Federal "Orthosonic"..... 140
Federal Type 59..... 139
Fenway "Concertrola"..... 141
Ferguson 6-Tube TRF..... 144
Fitch Tropodyne Super-Het..... 145
Flewelling Super-Booster..... 150
Flewelling Single Circuit..... 149
Flewelling Super-Regenerative. 148
Freed-Eisemann KD-50..... 152
Freed-Eisemann FE-17..... 156
Freed-Eisemann Model 48..... 153
Freshman "Masterpiece"..... 158
Freshman Model Q-15..... 163
Freshman Elitrification..... 159

Garod Model EA..... 164

Preface

These VINTAGE RADIO IDENTIFICATION SKETCH-BOOKS have appeared in three prior editions during the last few years, and have become accepted by university libraries and historical museums, as well as serious vintage radio hobbyists as a significant contribution and ongoing reference of the rise of Radio as a distinct social phenomenon. Through all editions, the purpose of these SKETCH-BOOKS has remained the same - to return a sense of the wonder and the allure of early radio by offering identifying construction instruction of hundreds of early circuits, hardware, accessories, and personally relateable items not to be found in Riders, Sams, Beitmann, et al.

It is important that the reader recognise that these SKETCH-BOOKS and MONOGRAPHS (see back-cover) are not, and were never intended to be, a comprehensive treatise embracing the entire field of early wireless communication, or a course in radio and electrical theory. They have been designed to be utilised by serious hobbyists.

A general knowledge of the vocabulary and the jargon of Radio has been assumed. The use of definitions and mathematical formulae has been deliberately avoided, as such information is readily available from other sources. However, if questions arise from any part of these SKETCH-BOOKS and MONOGRAPHS, the author will be pleased to have a go at answering such questions.

As the "bug" below states, the real fun of Radio has always been in doing it yourself, and not in merely collecting this or that marque and placing it on a shelf to gather dust, mute and motionless, and ambiguous to the non-hobbyist.

D.H.MOORE, A.D.I.

INTRODUCTION

These SKETCH-BOOKS and MONOGRAPHS have appeared in three prior editions since their creation by the author, the latest edition being the one before you. The purpose of both SKETCH-BOOKS and MONOGRAPHS has remained the same throughout each edition - namely, to reveal for the benefit of the current generation and to indulge the sense of nostalgia of old-timers, the magic and the wonder inherent in the rise of Radio, as a distinct socio-technical phenomenon.

While the basis of authority for any ongoing hobby, such as Vintage Radio, turns exclusively on its accumulated historically validated literature, and despite the fact that thousands of pieces of literature were published during the Twenties dealing with Radio, it is also a fact that much of it has been thrown away, become scarce, and in consequence a lot of misinformation, if not ignorance, can be encountered at most any swap-meet. Very few old radio hobbyists have extensive libraries of early literature, historical data, references to the human side of the rise of Radio.

We have the massive compilations of Rider's, National, Sams, RCA Service Manuals, Gernsback's Encyclopedia, McMahon's notable contributions, but if you look closely at these "bibles", you will find that all are strangely incomplete when it comes to defining the whole story anent Radio. None are truly complete, in the traditional sense of authoritative reference material. We have recently witnessed an enormous upsurge in the reprinting of a few early pieces of literature from certain manufacturers, a re-hash of easily accessable material, and, of course, the plethora of stupid "price guides" which only tend to confuse the unwary.

There have been but seven basic radio circuits, and today we are limited to but two, despite the manipulated mystique known as "electronics" - although it might be mentioned that without Radio, the current mystique could not have come about. The fundamental or under-lying principles of the communications art have not changed by one jot since 1919, and giving new names to old phenomena does not alter that fact. Those basic principles are well-documented in these SKETCH-BOOKS and MONOGRAPHS, we feel, and they are presented in their original form and original nomenclature.

It is important that the reader recognise that these SKETCH-

BOOKS and MONOGRAPHS are not, and were never intended to be, a comprehensive treatise embracing the entire field of Radio. There are whole libraries given over to that field, and are readily accessable, and to repeat such information here would advance nothing, along with defeating the primary purpose of these works.

It was the myriad of "orphan" radios that gave the game its colour and flair in the early days, and even though thousands of such were produced, few have been referenced in the "bibles" listed above. Some manufacturers went on to become established firms, and a few are still with us - or, at least their names are with us, such as Magnavox, Utah, Zenith, Drake, Philco, etc. Many an "orphan" circuit reflected minor and major advancements in the state-of-the-art; such innovations were immediately glommed onto by such as The Octupus (RCA) sans credit to the originators. Such a practice by Big Business is still with us...

The schematics, constructional details, coil data, alignment procedures, trouble-shooting procedures, operating techniques, and socio-historical asides you will find in these SKETCH-BOOKS and MONOGRAPHS cannot be found at any other source, and in consequence, these books have taken on an historical perspective that could be beneficial to all who are fascinated by Vintage Radio. Such data may not be of interest to the so-called "collector" who professes a burning passion for only pristine sets and who places them on a shelf, never to play them, and then boasts that owns this or that marque. This is unfortunate, in as much as such people are denying themselves the full enjoyment of the hobby, on the one hand; and denying pleasure to sincere hobbyists who enjoy just seeing a particular marque.

The more one learns of one's hobby, the greater is the derived pleasure; when one is moved to actually construct one of the early circuit, just to see what it will do, there is the added sense of satisfaction as well as the sense of a genuine accomplishement. It is unfortunate that home-construction has become a lost art, and even ham-radio operators, who used to construct practically all of their equipment, are now buying off-the-shelf Japanese communications gear, and never really knowing what's going on inside: and repairing such gear never occurs to them.

In this volume you will find most of the marques ignored by such as Rider, for hundreds of the broadcast receivers offered in the Twenties. Other volumes deal with similar data for most every aspect of early Radio - refer to the back cover. You will also find in Volume I, for example, something unavailable from any other source - a thorough Bibliography of every circuit offered via radio media from 1919 through 1933. The Bibliography is not limited just to those marques found in these SKETCH-BOOKS, If you know where something can be found, you've won half the battle of searching.

If you are interested in a certain marque not listed in this volume, refer to the listing of seperate MONOGRAPHS or Speciality Publications on the back cover - it is possible that you will find it. While most of the names are well-known, it is not so well-onown as to who certain marques went through so many variations, without actually altering the basic circuit. These data, in themselves, are interesting, on the one hand; and tend to dramatise the spirit of adventure that must have infused those early set-builders. You can re-capture that spirit yourself, by having a go at actually constructing a few of the circuits you will find here.

Because these ten volumes are one man's labours of love, it follows that in the natural order of things, errors, large or small, have probably occurred. For such errors, the writer assumes complete responsibility, and would greatly appreciate hearing from readers who have been keen enough to spot such, so that a correxion may be made.

Special acknowledgements and thanks must be extended to Doug Yule, Howard Granoff, David Taylor, Chas. Rhodes, and Jim Cranshaw for their interest and ongoing encouragement in these labours.

- D.H.MOORE

Palo Alto
1990

ABOUT THE SCHEMATIC DIAGRAMS

Until the RME was finally organised in 1929, but really did not gain full authority over manufacturing standards in the radio industry until around 1933, many early schematics or electrical diagrams offered a maze of symbols and signs, some rather weird. Even after E.H.Scott invented the pictorial electrical diagram in 1923, and it was immediately imitated by most early media, odd schematics could still be found in print. You will find a representative sample of a few of the early symbols, as an educational posit, but where feasible, modern equivalents have been employed.

All schematic sketches are free-hand drawings. Do not try to scale any of them, unless they are designated as being Full Scale. Abbreviations used are more or less conventional, but as an added emphasis the following are appended:

G/L	= grid-leak	Ø	= diameter
T	= turns of wire	C.T.	= centre tap
SCC	= single cotton covered	N/C	= normally closed
DCC	= double cotton covered	N/O	= normally open
SSC	= single silk covered	N/C	= neutralising condenser
DSC	= double silk covered	L.A.	= long antenna
RFC	= radio frequency choke	S.A.	= short antenna
VARIABLE	= variable condenser	GND	= ground (see below)

The symbol for Ground and Chassis created some confusion for a long time, until the RME set the standard. Early GND symbols referenced what our English cousins call "earthing" - i.e., actually fixing one end of a coil in the ground. Other uses showed the GND as either B- or A- or A+. For ease of definition here, the following symbols have been employed:

Earth Ground

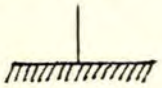

Chassis Ground

Where no tube designation is shown, as it would be considered redundant, always assume 01As. Undesignated RFCs are 85 mH, and all undesignated power chokes are 30 H.

In the lower left-hand corner of most of these sketches you will find a parenthetical reference. This indicates the source of the data depicted. Where multiple references are shown, it simply means continuing or seperate articles were published on that particular marque. Where no such reference occurs, it means the data were from the author's files.

ACME AC-3, 1928

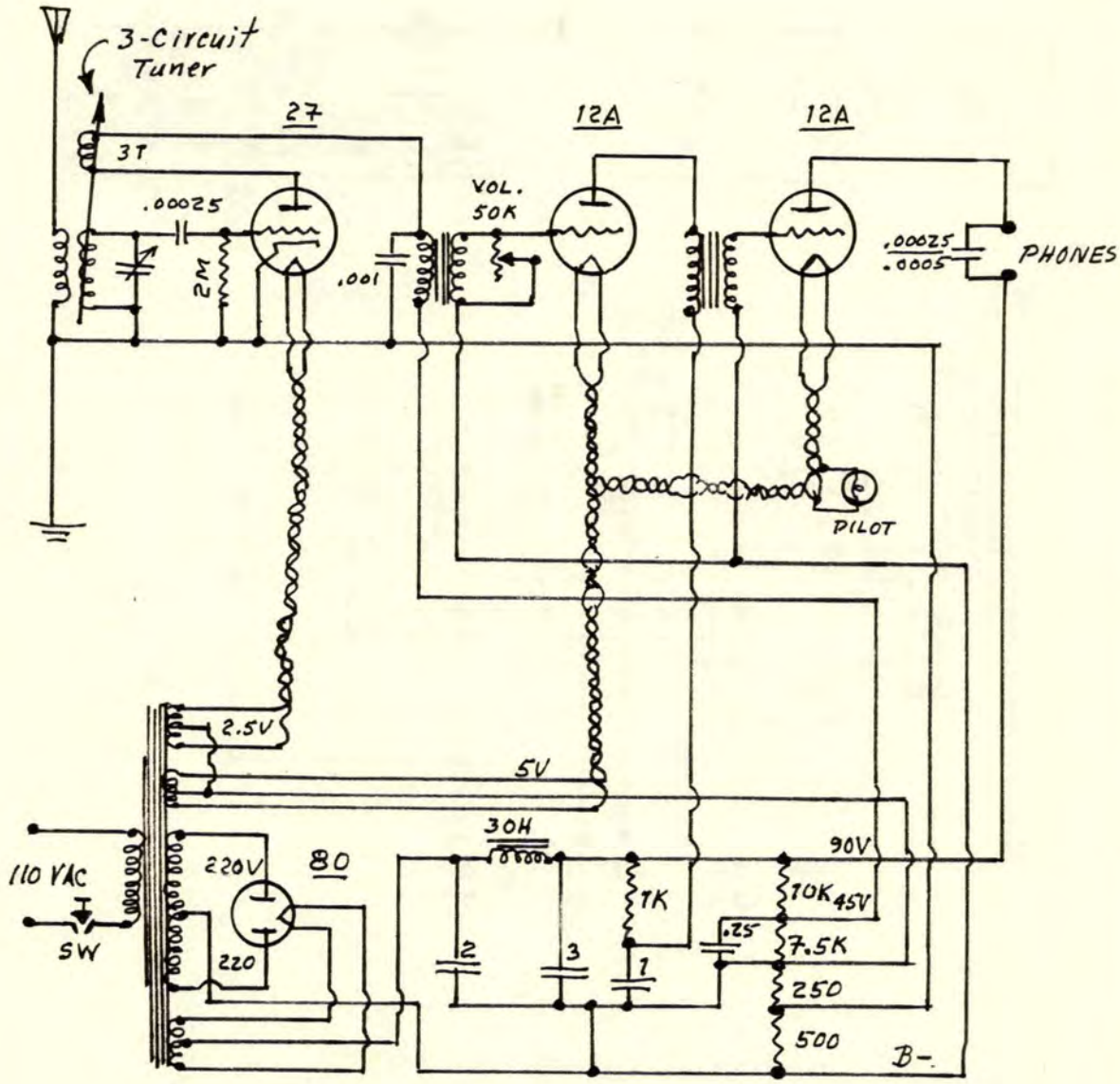

Cabinet and sub-panel layout same as the AC-4.

(R 1-29)

AERO 3-CIRCUIT TUNER, 1927

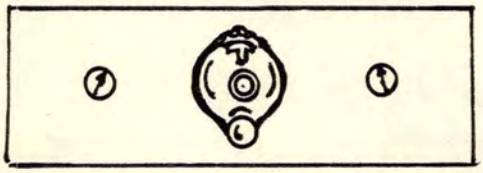

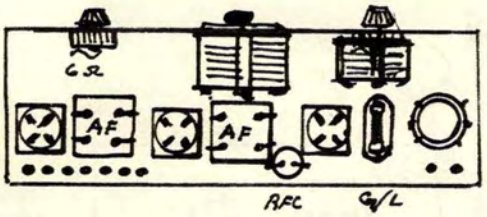

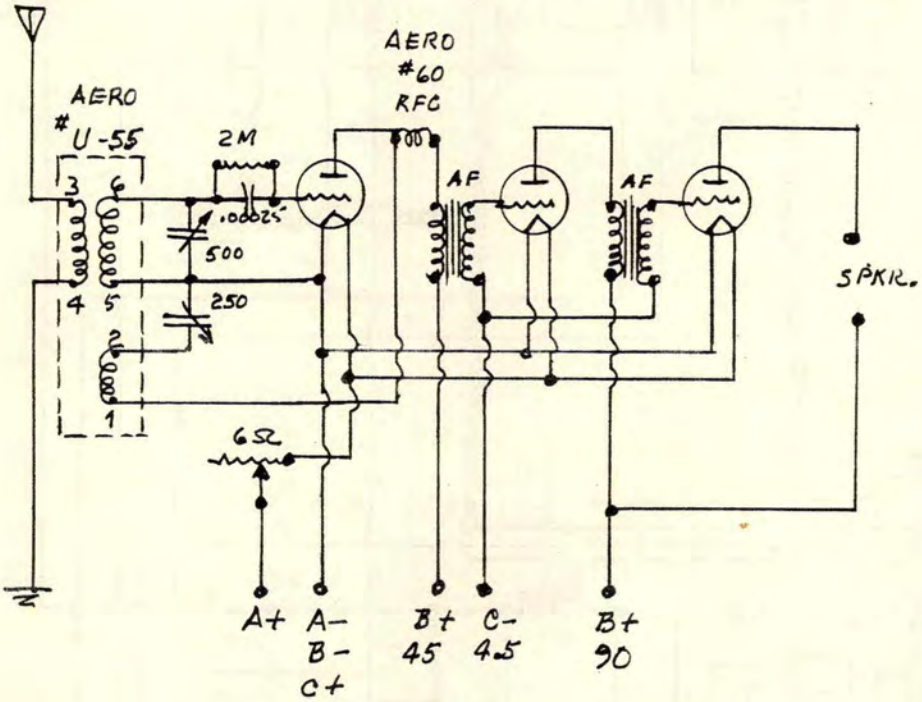

THORDARSON AF XFRMRS. 3.1 (2).
NATIONAL 'B' DIAL.
AMSCO VARIABLES.
X-L BINDING POSTS (9).

AERO U-55 COIL HAS A FIXED TICKLER.

(AERO LIT.)

ACME AC—4

ACME AC-4, 1928

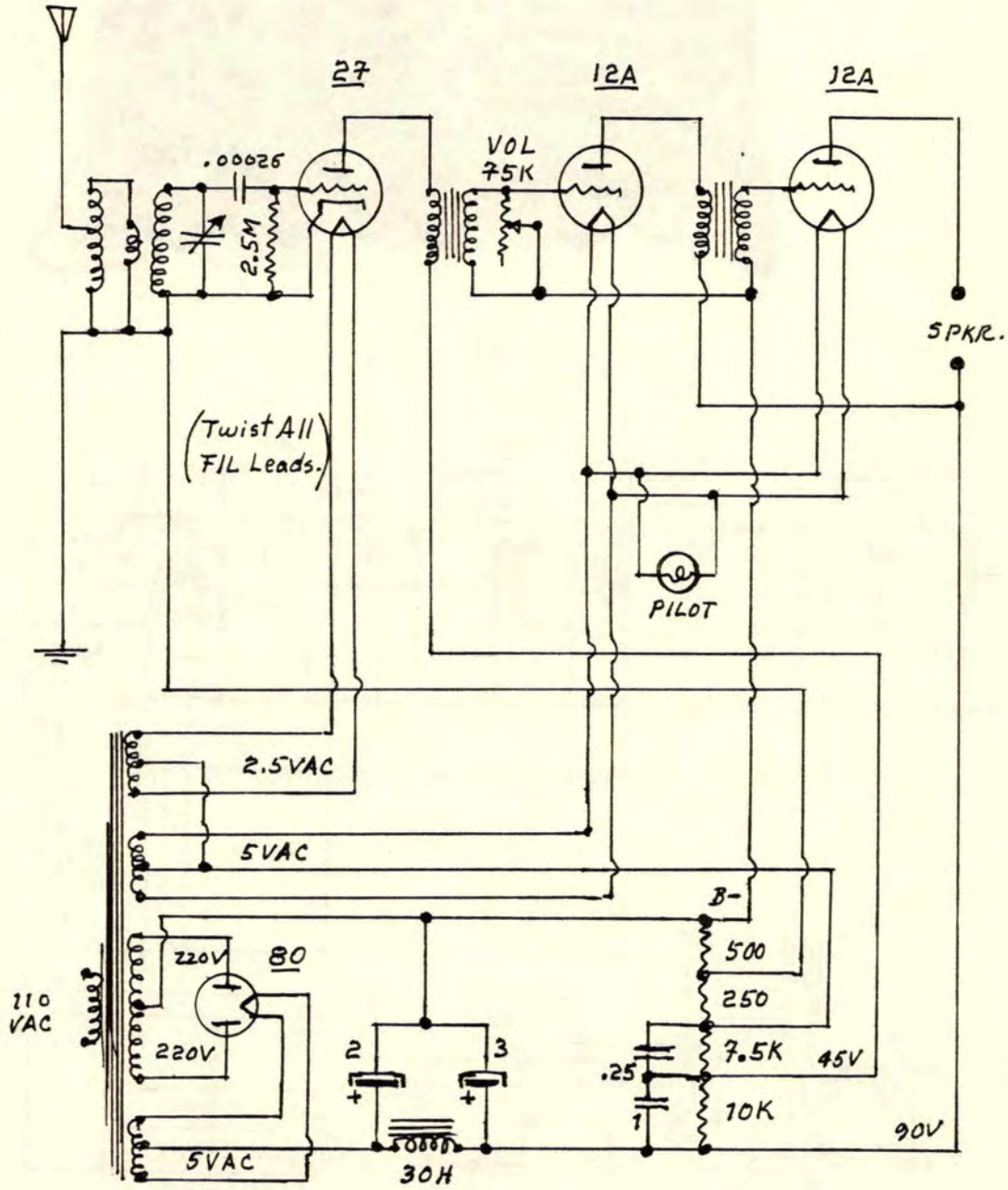

(ACME)

ACME AC-7, 1928

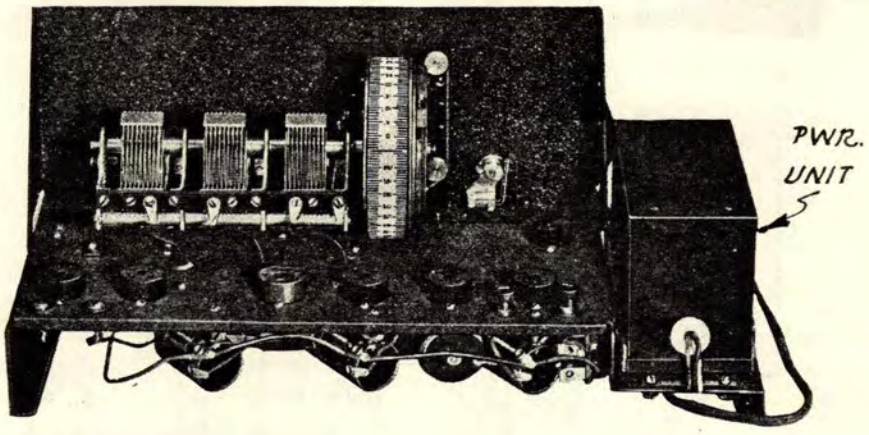

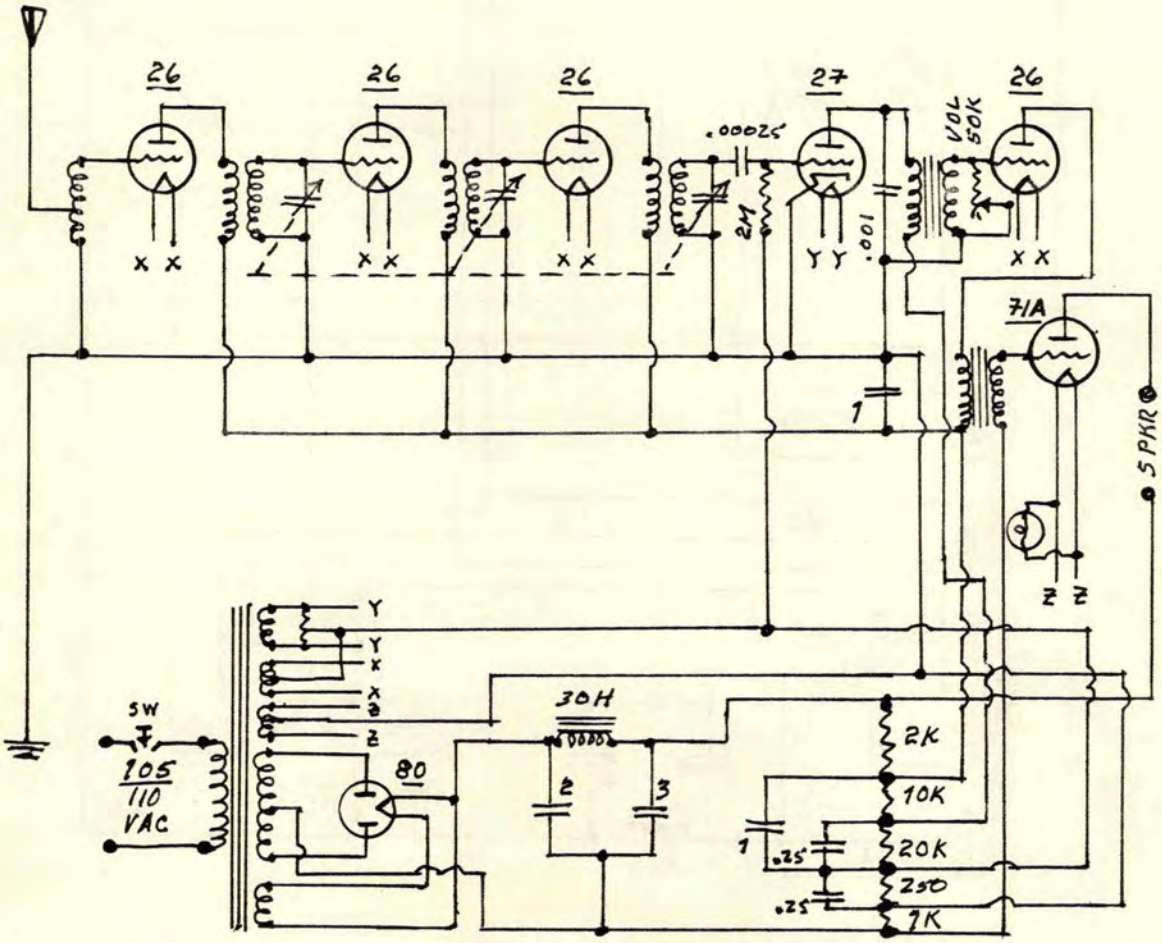

(R 1-29)

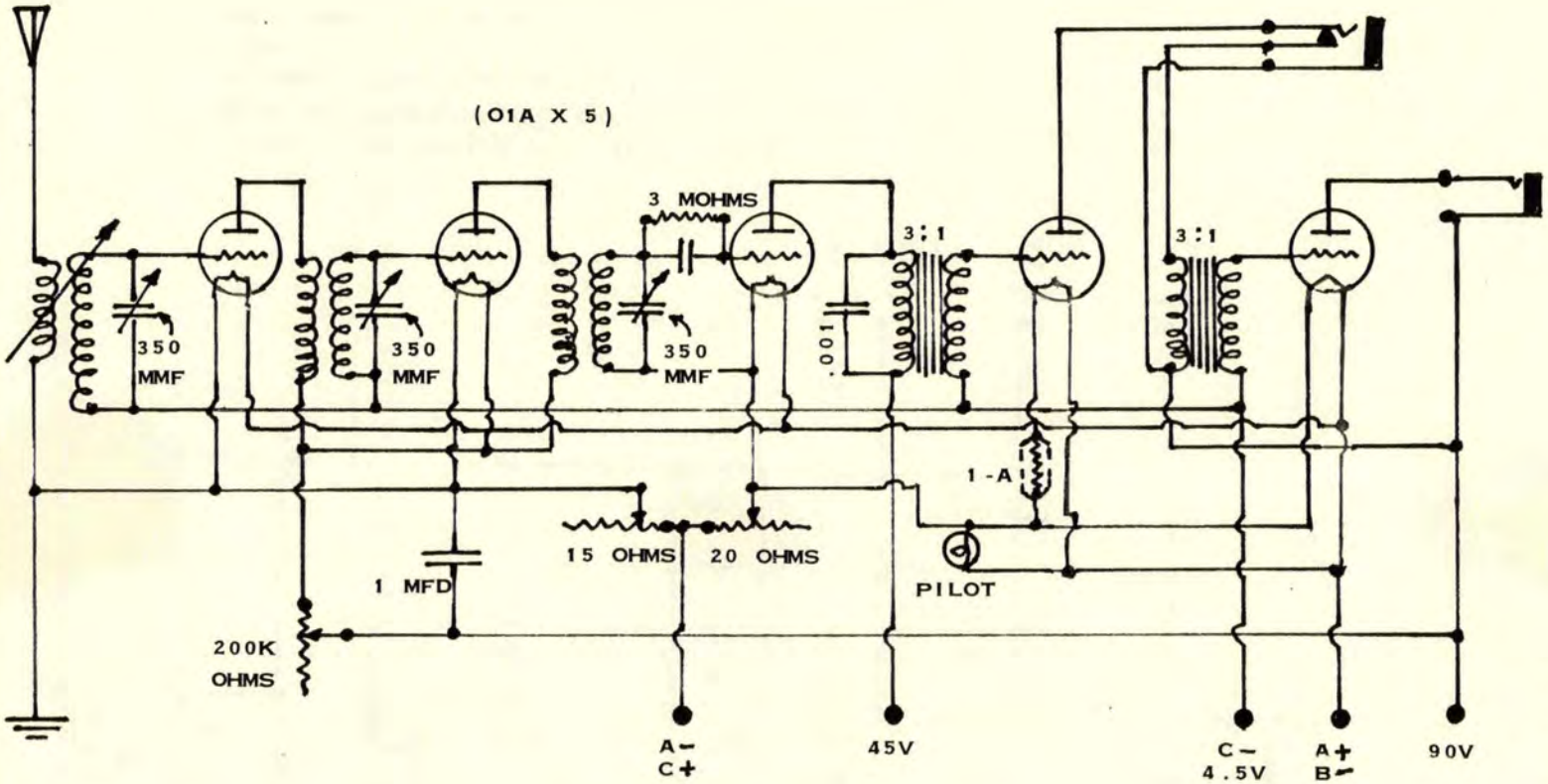

AERODYNE T.R.F., 1926

NOTES: SET WILL ONLY OSCILLATE WHEN ALL DIALS ARE IN RESONANCE.

12 OR 12A MAY BE SUBSTITUTED FOR LAST AF STAGE.

PANEL - 7" X 18" ~ SUB-PANEL - 7" X 18"

AERO COIL SET NO. 120 USED.

(AERO LIT)

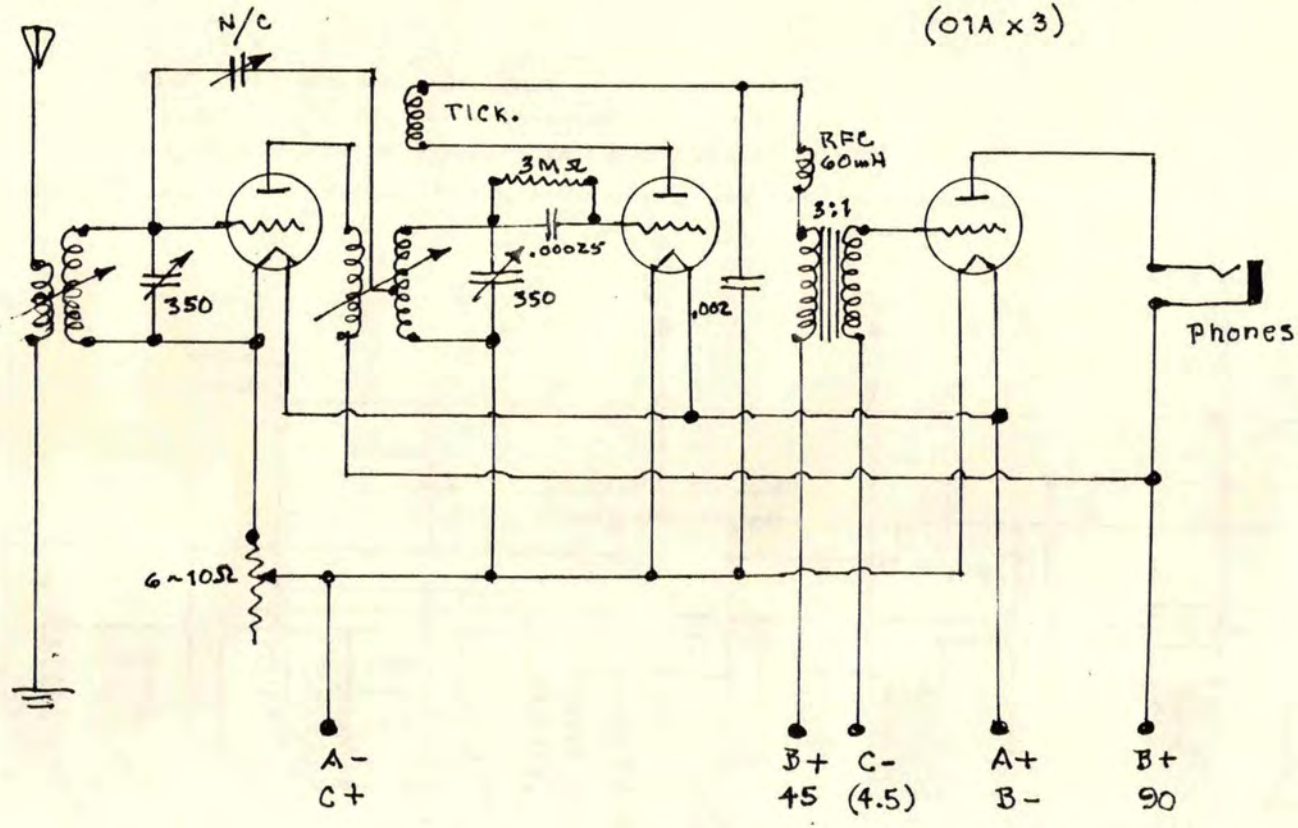

AERO REGENERATIVE COIL SET (2 COILS).
AERO AF TRANSFORMERS, RATIO 3:1.
BENJAMIN SUB-PANEL BRACKETS (2).
PANEL - 7" X 18".
SUB-PANEL - 7" X 18".

AERO REGENERATIVE RECEIVER, 1926

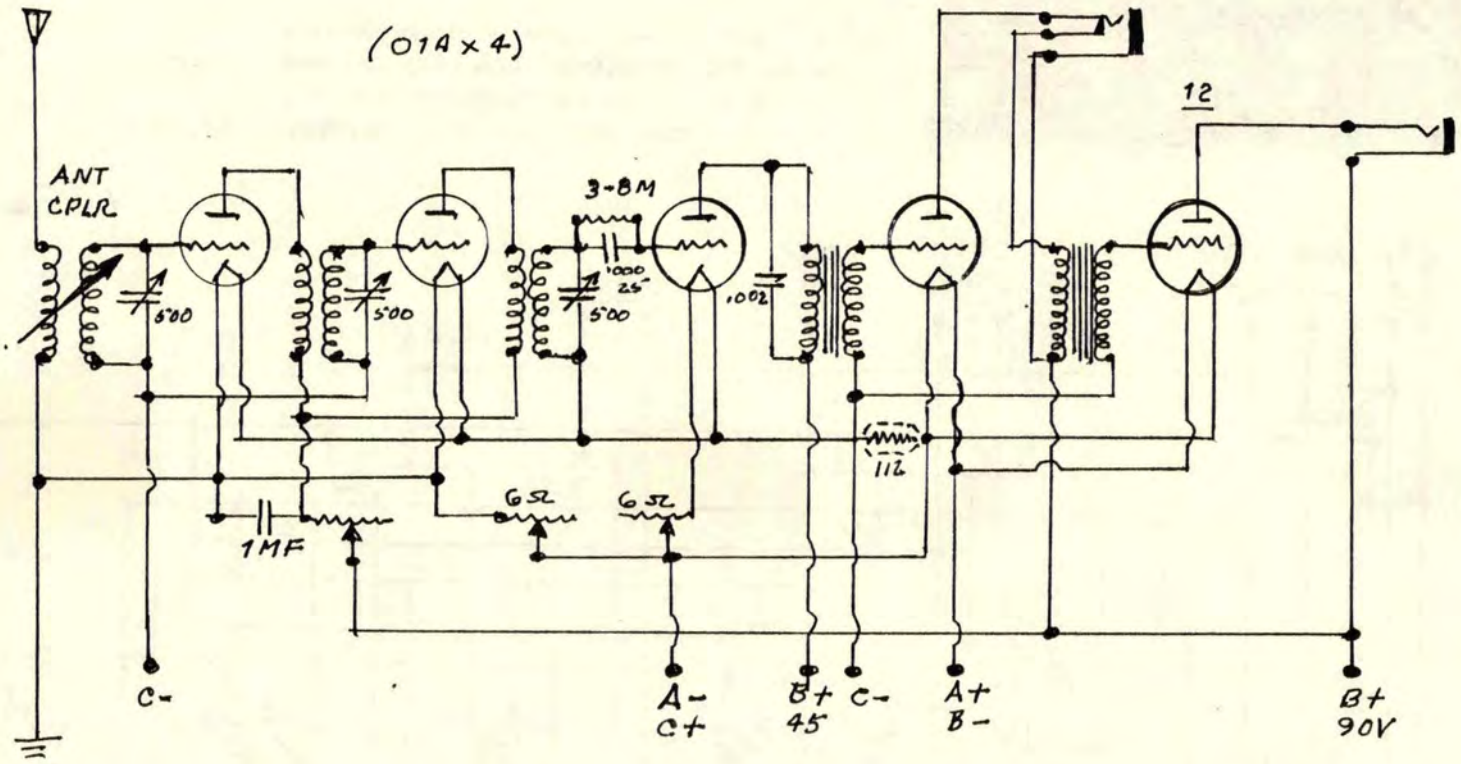

AERO FIVE TRF, 1926

AERO COIL SET NO. 120 TRF (3).
COILS MOUNTED AT RIGHT ANGLES TO EACH OTHER.
AS WITH ALL ACME RECEIVERS, ACME AF XFRMRS. WERE USED.

(AERO LIT.)

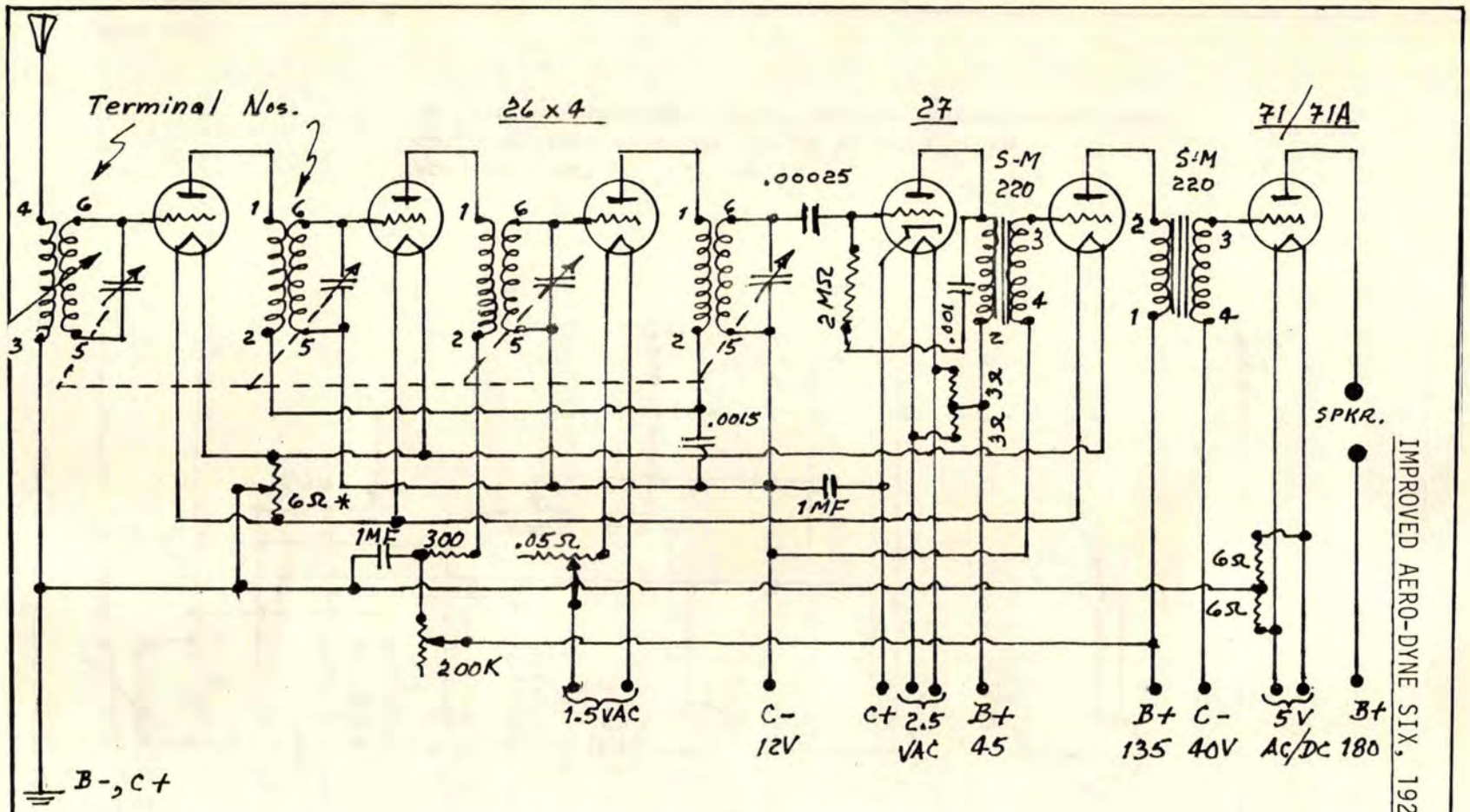

IMPROVED AERO-DYNE SIX, 1926: $90.35.

NOTES: HAMMARLUND 4-GANG VARIABLE.
2.2 VAC RECOMMENDED FOR 27 FIL.
THE .05-OHM POT. CONTROLS THE 26 FIL.
ARRANGEMENT OF PARTS AS ORIGINAL MODEL.

(*) = MOUNTED ON SUB-PANEL BEHIND ANT. VARIABLE - USED AS A HUM-CONTROLLER.

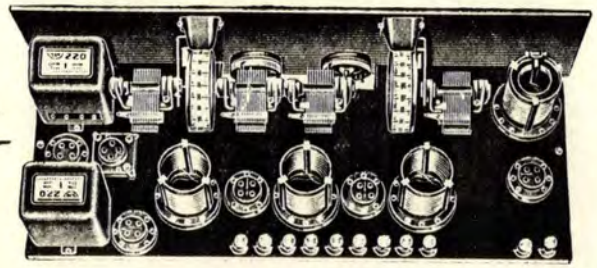

(AERO LIT.)

AERO-SEVEN TRF, 1927; Sht. 1

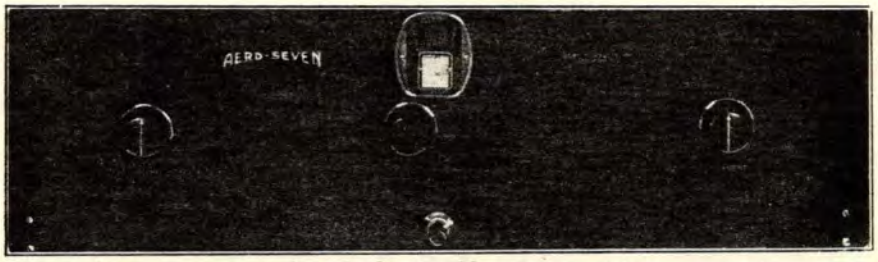

FRONT PANEL

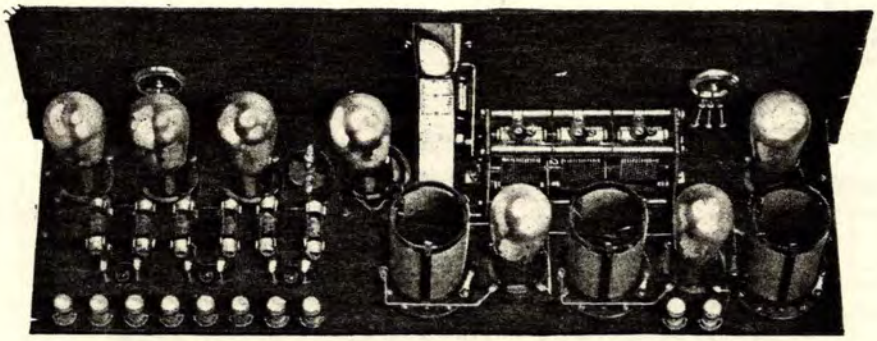

REAR VIEW

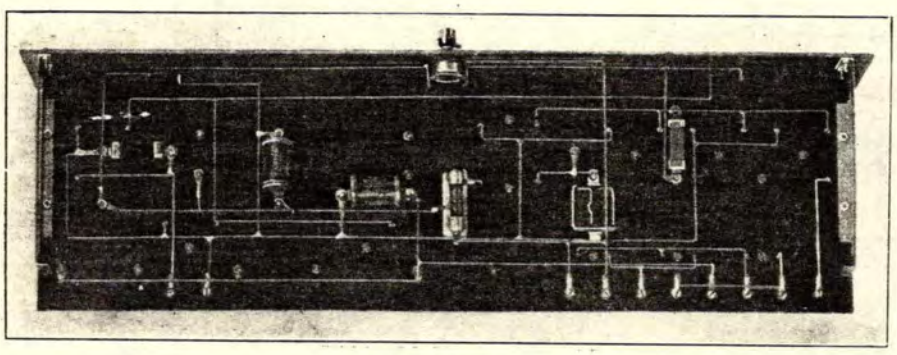

BOTTOM VIEW

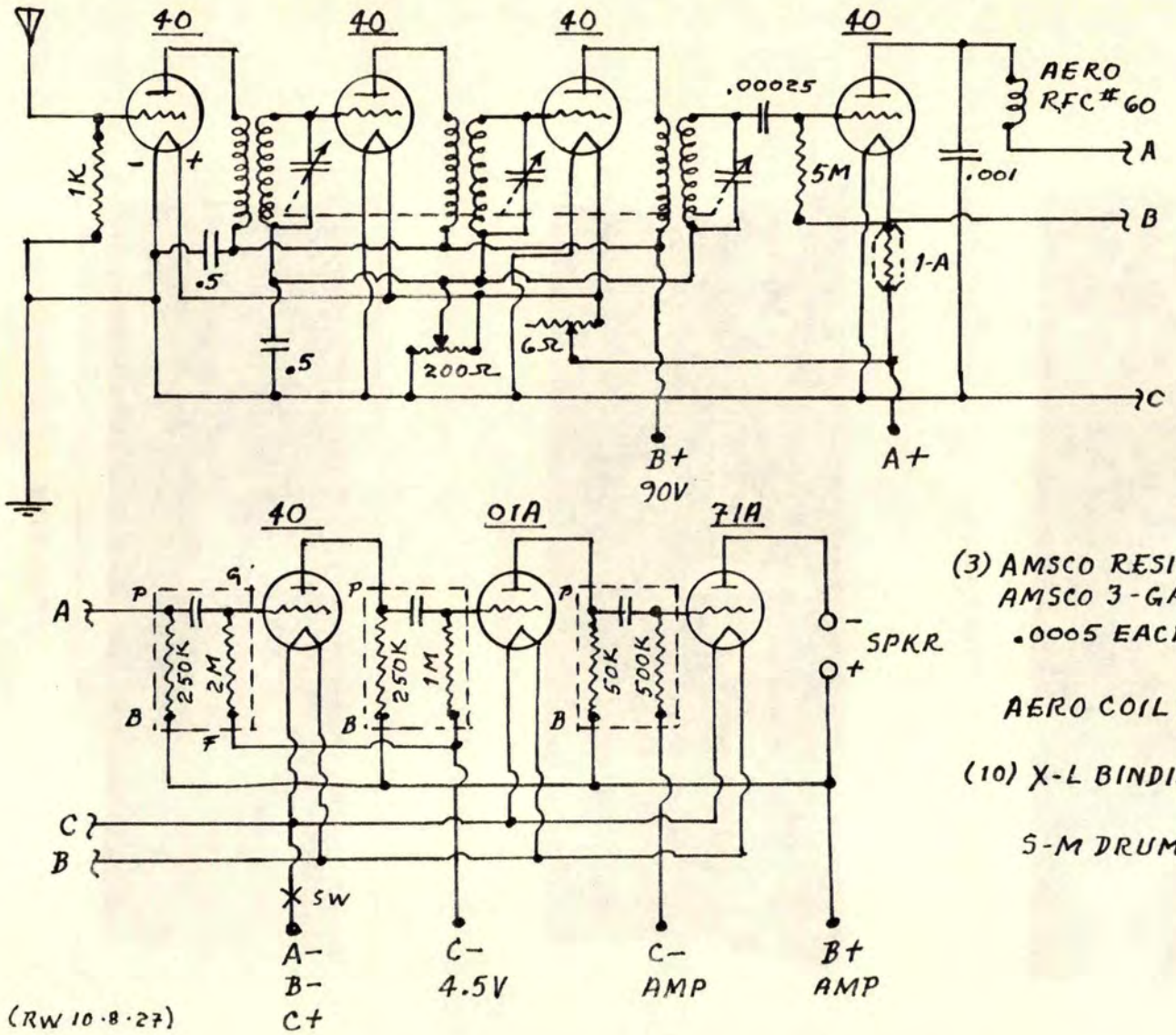

(3) AMSCO RESISTO-CPLRS.
AMSCO 3-GANG VARIABLE,
.0005 EACH SEXION.

AERO COIL KIT U-12.

(10) X-L BINDING POSTS.

S-M DRUM DIAL.

AERO-SEVEN TRF, 1927; Sht. 2

"CHRONOPHASE"

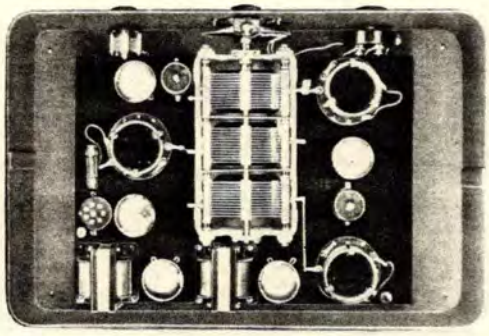

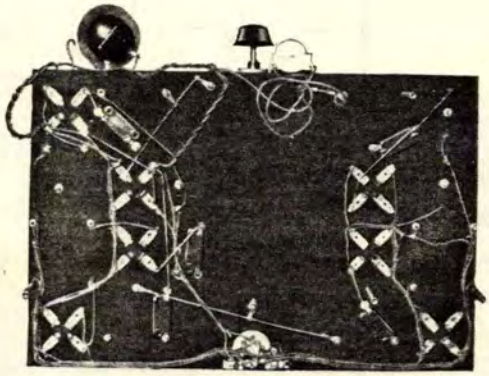

The "Chronophase System" was an accomplishment in 1929 that allowed a shift of the relative time of maximum voltage in each circuit, making it possible to keep all of them working at full strength without the receiver, as a whole, breaking into oscillation. The Chronophase System was employed by AERO in their Trio, Metropolitan, Aero-Dyne, and Aero-Seven receivers, and while they did not offer factory-built radios, their kits were of high quality. The kits ranged in price from $42 to $98, and their three short-wave converters were more dependable than most.

AERO PRODUCTS
INCORPORATED
4611 East Ravenswood Avenue
CHICAGO

AERO "CHRONOPHASE" TRF, 1928; Sht. 2

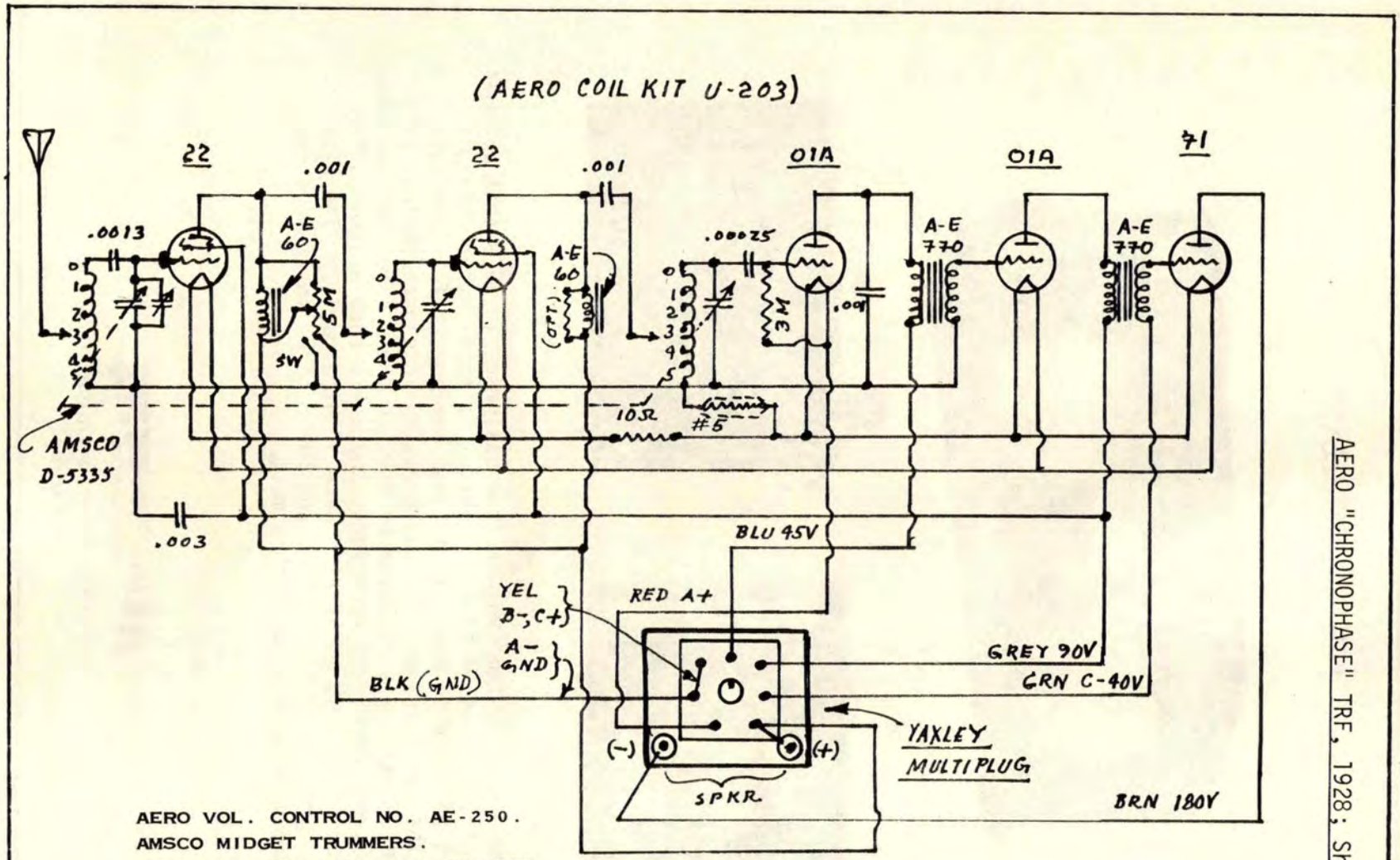

AERO VOL. CONTROL NO. AE-250.
AMSCO MIDGET TRUMMERS.
S.G., AC, DC TUBES MAY BE USED.
METAL PANEL 7" X L8".

ORIGINAL KIT PRICE $74.50.
ALSO KNOWN AS THE "CHRONOPHASE SCREEN-GRID 5".

(CB W-28)

ALDEN-SOMERBRIDGE BALANCED RECEIVER, 1926: Sht. 1

This circuit was offered the home-constructor as an Inductance Balanced Bridge circuit, designed by Dr. Geo. A. Somersalo, 1926. It was the only circuit ever published in RADIO WORLD that was bereft of all component values.

While the layout is conventional enough, and standard components may be used, the requirement for the very special RF transformers called for must be mandatory. Otherwise, you'll never get a beep out of the set. Both dials must be rotated together, rocking the left-hand dial on a signal, and trimming it with the right-hand dial.

Dr. Somersalo was alleged to have laboured for six years to perfect his circuit, which, on study, was derived from the Wheatston Bridge design. If you have the Alden-Somerbridge RF units, the circuit is worth constructing, as you will find that the set's sensitivity and selectivity was better than most for the times, working best through a very short antenna.

It required some deep digging to find the original schematic, which is shown over-leaf, and you will note that it is straight forward enough and should present no problems for the experienced set builder. The circuit shows transformer-coupled AF output, but a later version stopt at the DET after four tubes, and utilised a Lynch Lamp-Socket Audio Amplifier (detailed in Vol. IV of these SKETCH-BOOKS).

My own experience suggests that transformer-coupling is more convenient and works just as well.

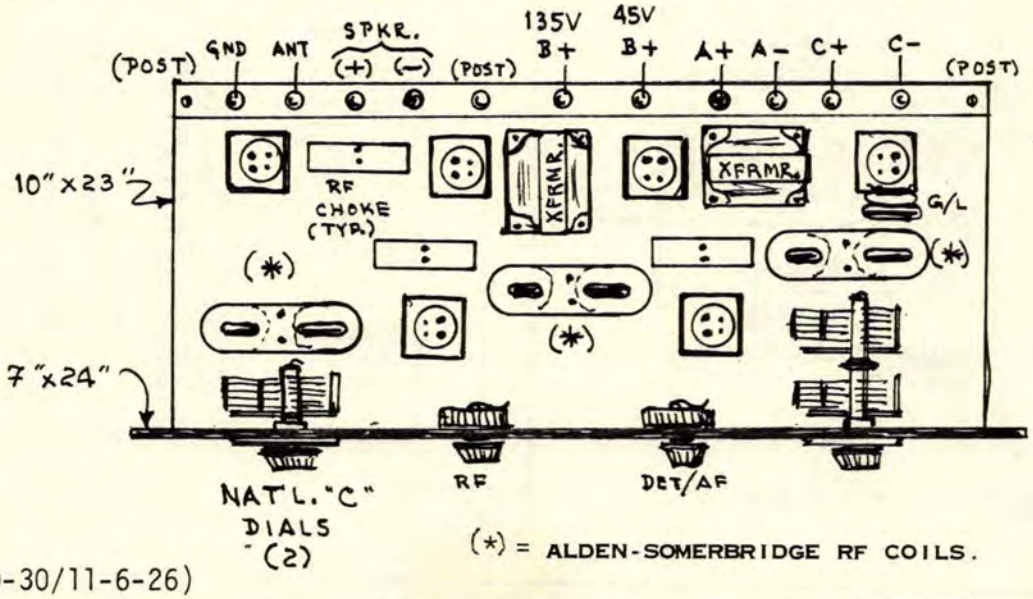

(*) = ALDEN-SOMERBRIDGE RF COILS.

(RW 10-30/11-6-26)

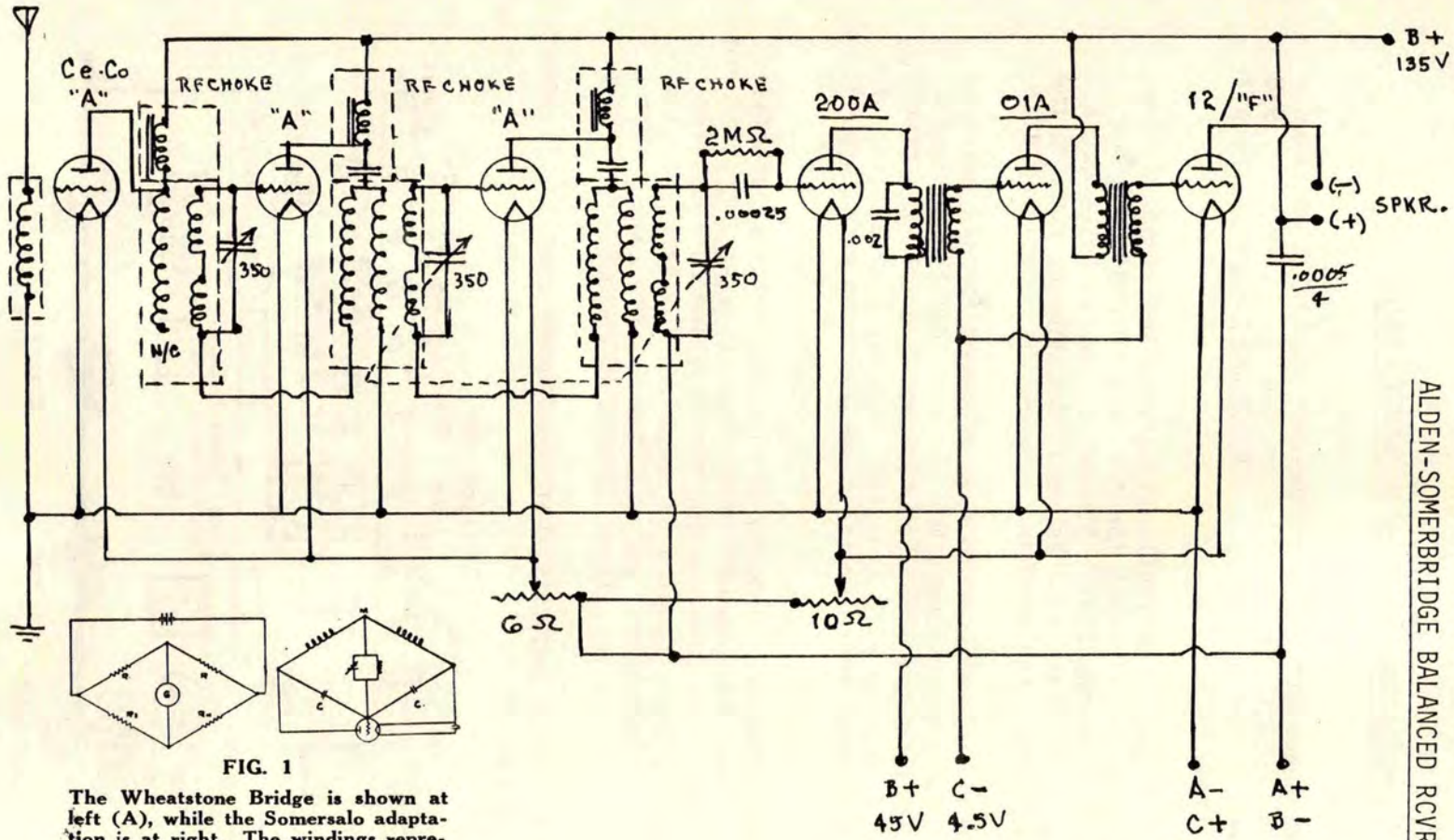

FIG. 1

The Wheatstone Bridge is shown at left (A), while the Somersalo adaptation is at right. The windings represent the plate coil. For A the formula is

$$\frac{R1}{R} = \frac{R2}{Rx} \quad \text{or} \quad Rx = \left(\frac{R2}{R1}\right) R$$

while for B, the Somersalo Bridge, the formula is

$$C \ (L + M) = C1 \ (L1 + M)$$

$$\frac{C}{C1} \left(\frac{L1 + M}{L + M}\right) \underset{\text{APPR.}}{\sim} \frac{N1}{N}$$

ALDEN-SOMERBRIDGE BALANCED RCVR., 1926;Sht. 2

ALDEN (Na-Ald) LOCALISED CONTROL RCVR., 1926;Sht. 1

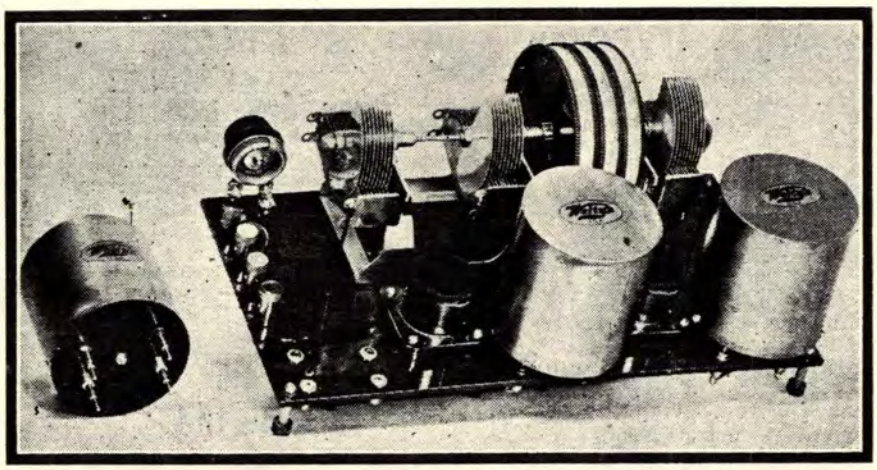

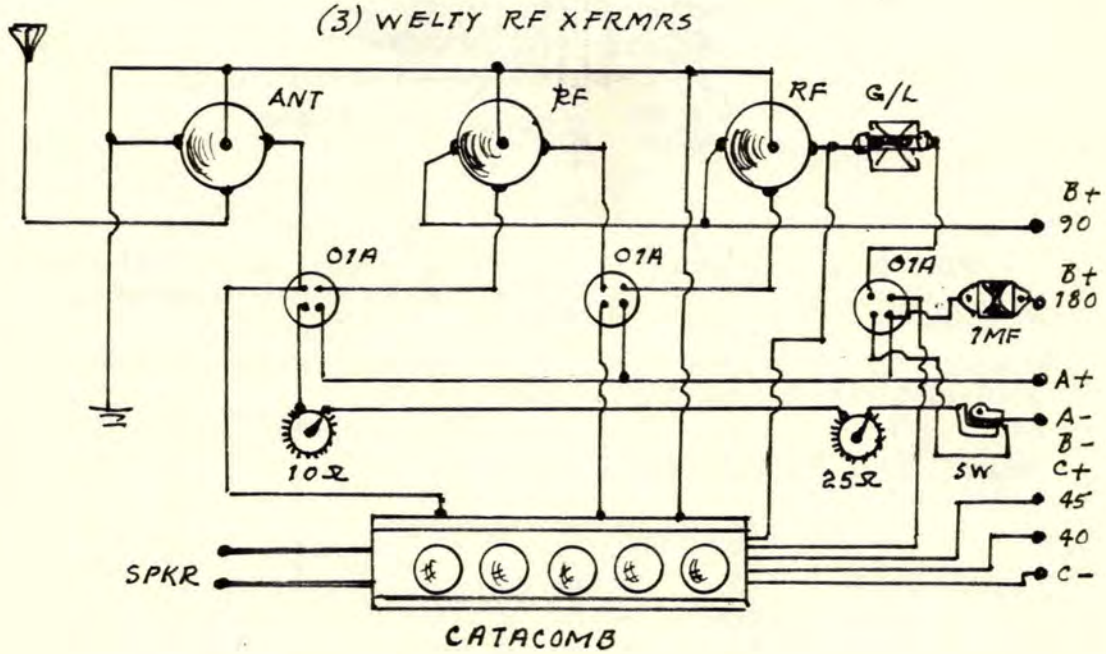

1926 Circuit Shown; See Sht. **3** for 1927 Circuit.

ALDEN (An-Ald) LOCALISED CONTROL RCVR.,1926; Sht. 2

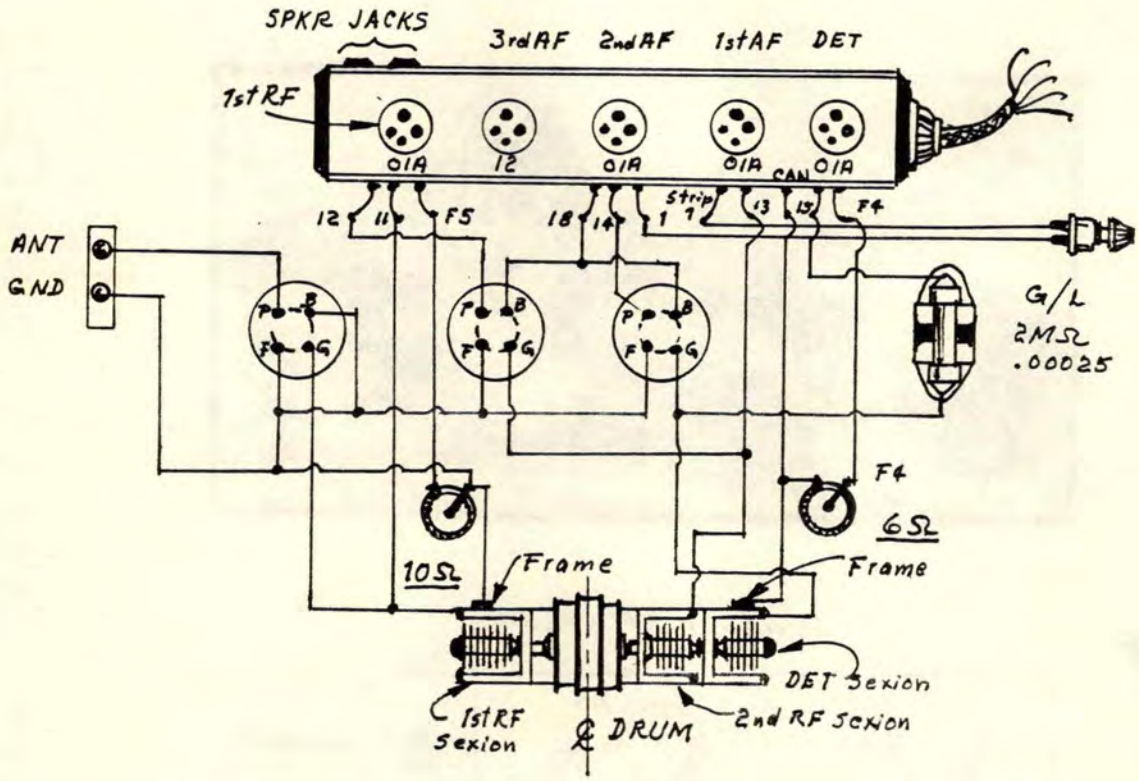

(3) WELTY RF Transformers
(2) Binding Posts

(3) Unganged 375mmf Variables
#12 Gauge Copper Hook-Up Wire

Panel = 7" x 14" x 3/16"
Terminal Strip = 2½" x 3/4" x 3/16"

Baseboard = 11" x 13" x ½"

Original Wire Colour Code;

Yellow	=	A+, B-
Green	=	C-
Red	=	B+. 135V
Purple	=	B+, 90V
Yel/Blk	=	A-,C+
Red/Blk	=	B+, 45V

NOTE: Reference to "Frame" above is the Stator of each Variable.

ALDEN (Na-Ald) LOCALISED CONTROL RCVR.,1926; Sht.3

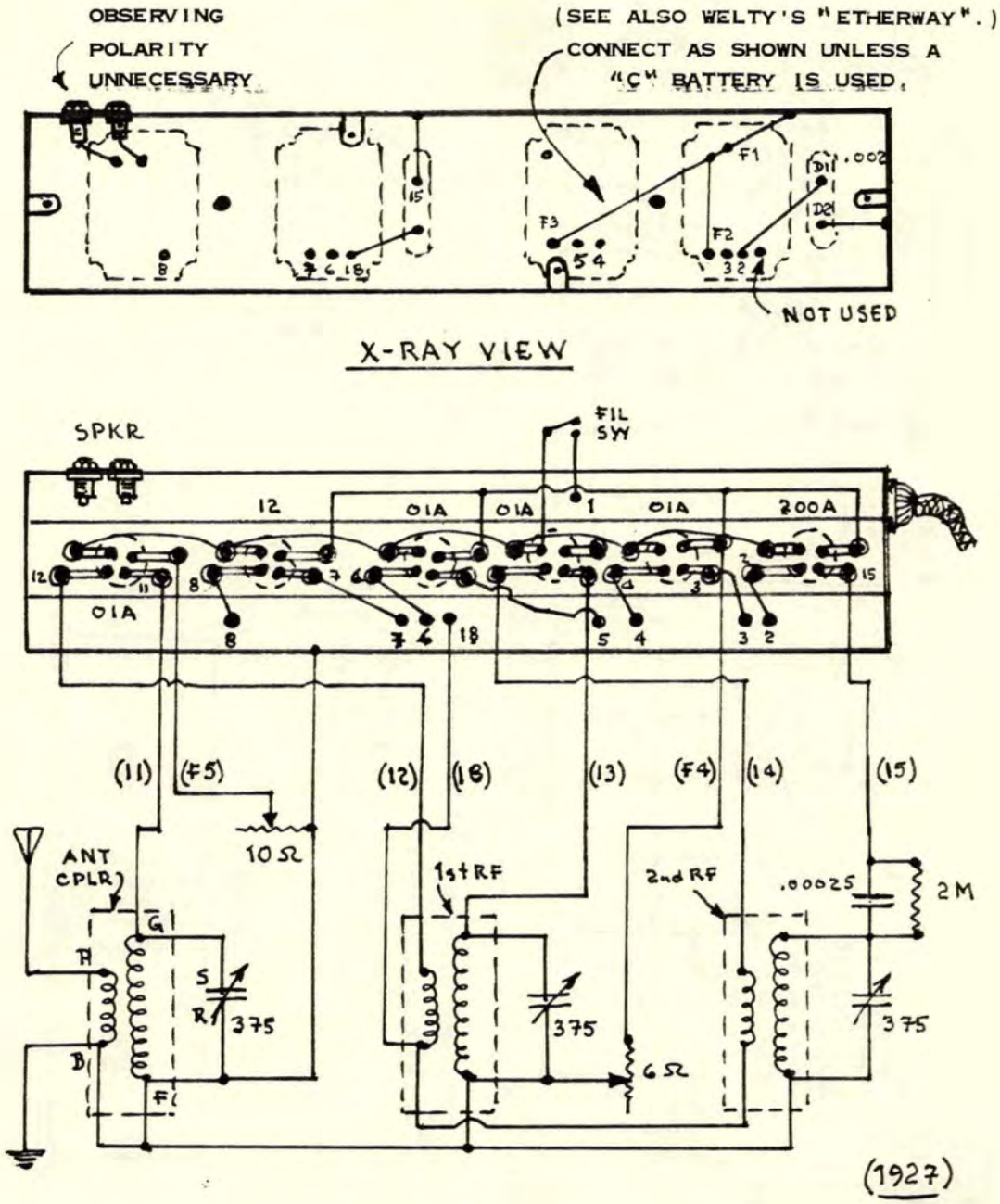

ALDEN "LOCALISED CONTROL", 1926

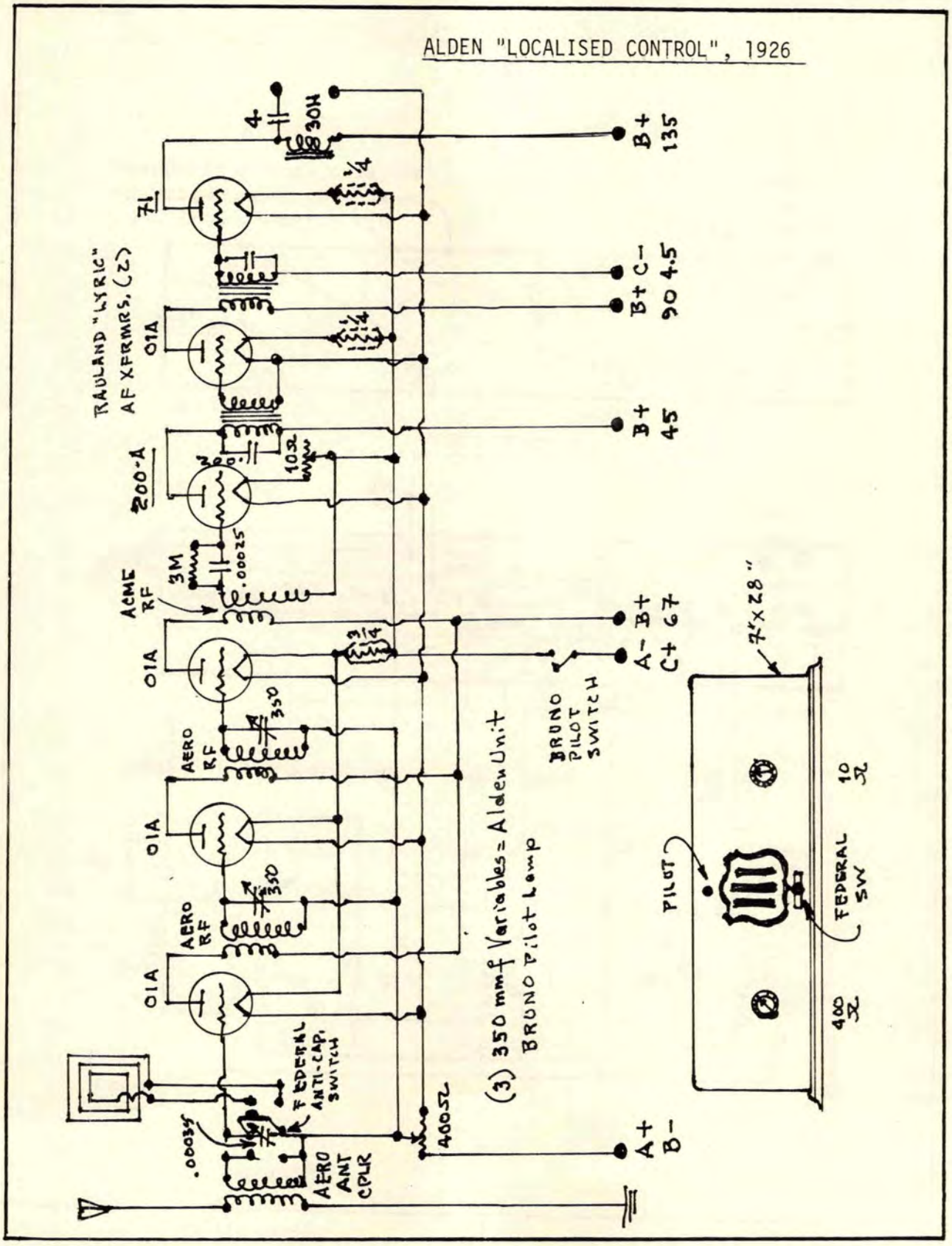

ALLIED-CISIN "FIND ALL FOUR", 1929; Sht. 1
(Allied Technical Institute, N.Y.C.)

NOTE; THE NAME "FIND ALL FOUR" SEEMS TO HAVE BEEN USED BY SEVERAL MANUFACTURERS, INCLUDING SILVER-MARSHALL. WHILE YOU CAN REGISTER A TRADE-MARK, YOU CANNOT COPYRIGHT A TITLE, AND ITS USE BY OTHERS IS A MORAL, NOT A LEGAL, OFFENSE.

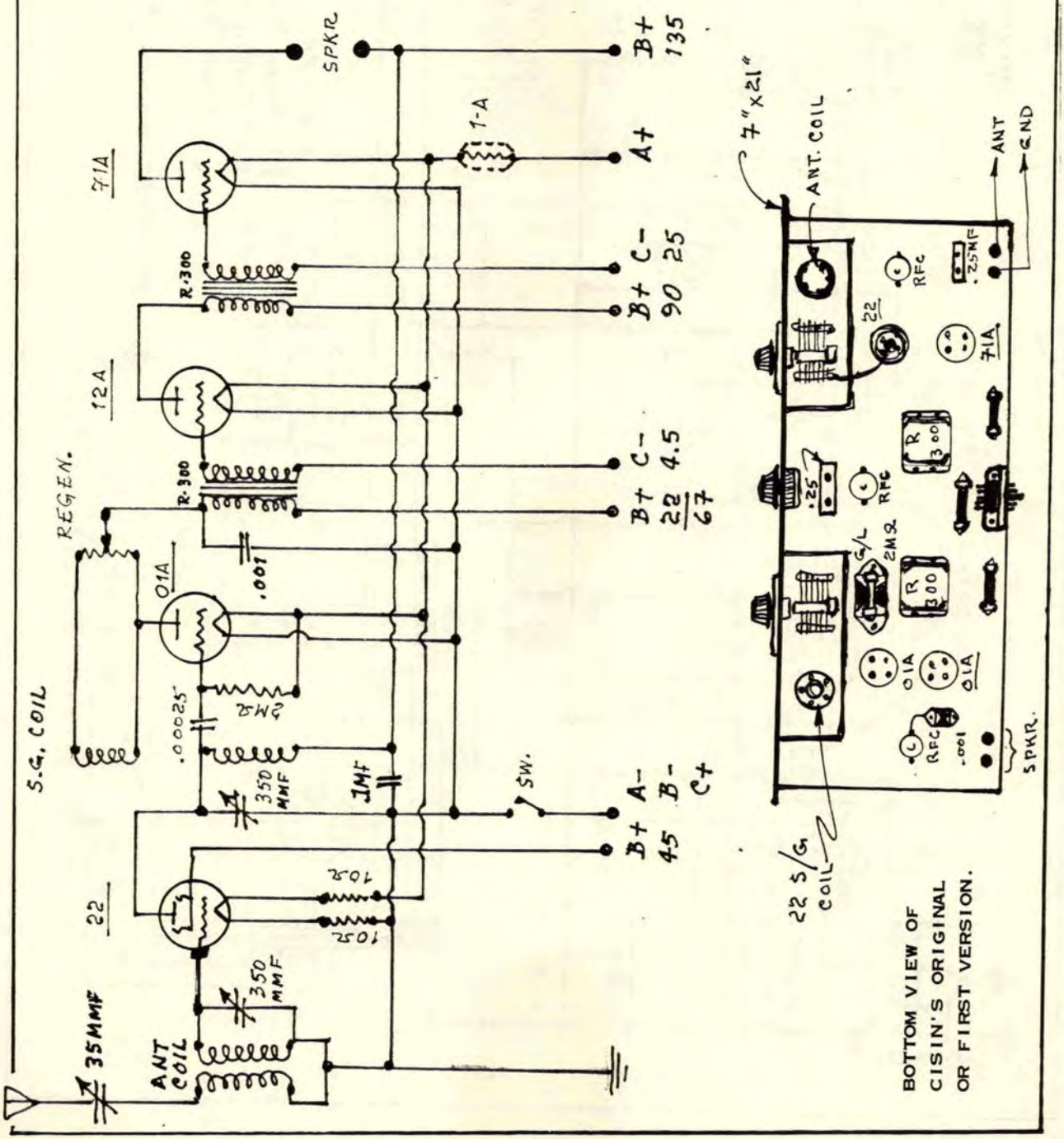

BOTTOM VIEW OF CISIN'S ORIGINAL OR FIRST VERSION.

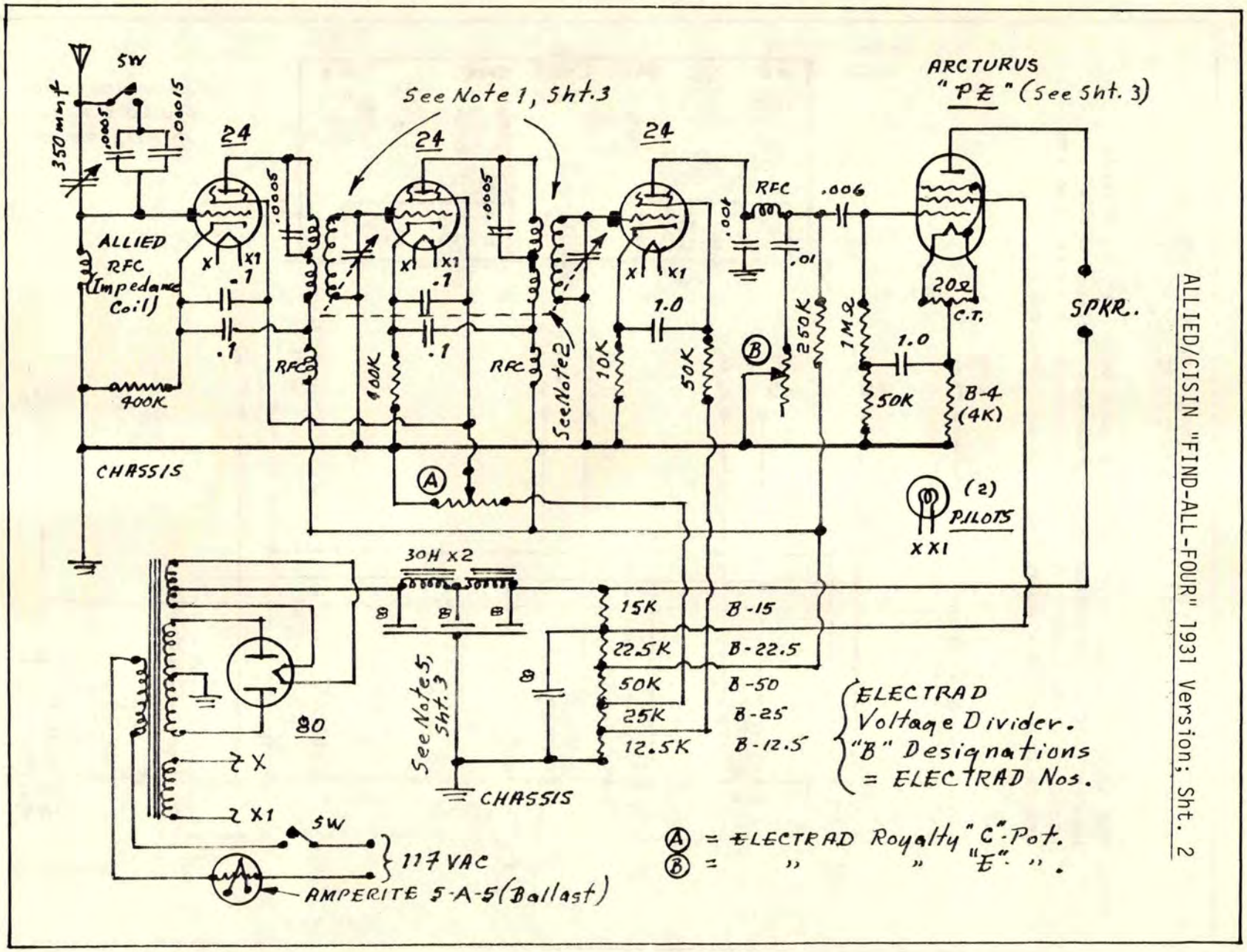
ALLIED/CISIN "FIND-ALL-FOUR" 1931 Version; Sht. 2
SW
350 mmf
.0005
.00015
ALLIED RFC (Impedance Coil)
400K
CHASSIS
24
X
X1
.1
RFC
See Note 1, Sht. 3
See Note 2
10K
50K
1.0
.006
.01
250K
1MΩ
20Ω
C.T.
ARCTURUS "PZ" (See Sht. 3)
SPKR.
B-4 (4K)
(2) PILOTS
XX1
30H x2
15K
22.5K
25K
12.5K
B-15
B-22.5
B-50
B-25
B-12.5
See Note 5, Sht. 3
80
2X
2X1
117 VAC
AMPERITE 5-A-5 (Ballast)
ELECTRAD Voltage Divider. "B" Designations = ELECTRAD Nos.
A = ELECTRAD Royalty "C" Pot.
B = " " "E" " .

ALLIED-CISIN "FIND-ALL-FOUR", 1931: Sht. 3

The 1931 version of Cisin's circuit employed the ARCTURUS "PZ" tube, relatively new at that time, and actually used by few manufacturers or set-builders. Whilt price may have thwarted the latter, it seems that the high B+ voltage requirement was not readily available from the B-eliminators then in vogue, as most stopt at B+ 180 VDC. The specifications of the ARCTURUS "PZ" tube are listed below:

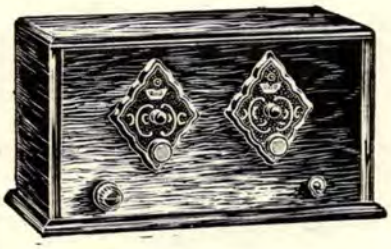

FIL Voltage	2.5 VAC
FIL Current	1.5 A
Plate Voltage	250 VDC
Plate Current	32 mA
Grid Voltage	250 VDC
Grid Bias	-16,5 VDC
Power Output	2.5 W
Grid Current	7.5 mA
Load Resistance	7K-ohms

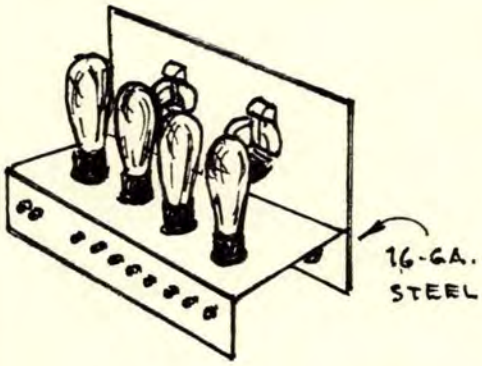

NOTES:

1. Allied coils no. P-SG.
2. Ganged variables 350 mmf each sexion.
3. ELECTRAD "Tonotrol" across SEC of 1st AF xfrmr. was optional.
4. Chassis was GND.
5. Original condenser block in power unit was AEROVOX 5-8888.
6. 1931 chassis was 16-gauge steel, formed as shown at the left.

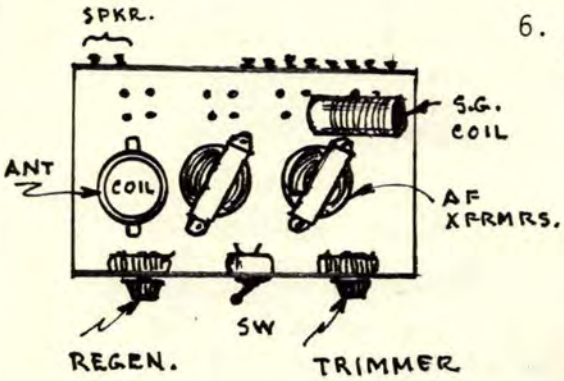

BOTTOM VIEW OF
ORIGINAL MODEL
(1931)

"AMPLIDON No.1" (Try-Mo/Wallace), 1929

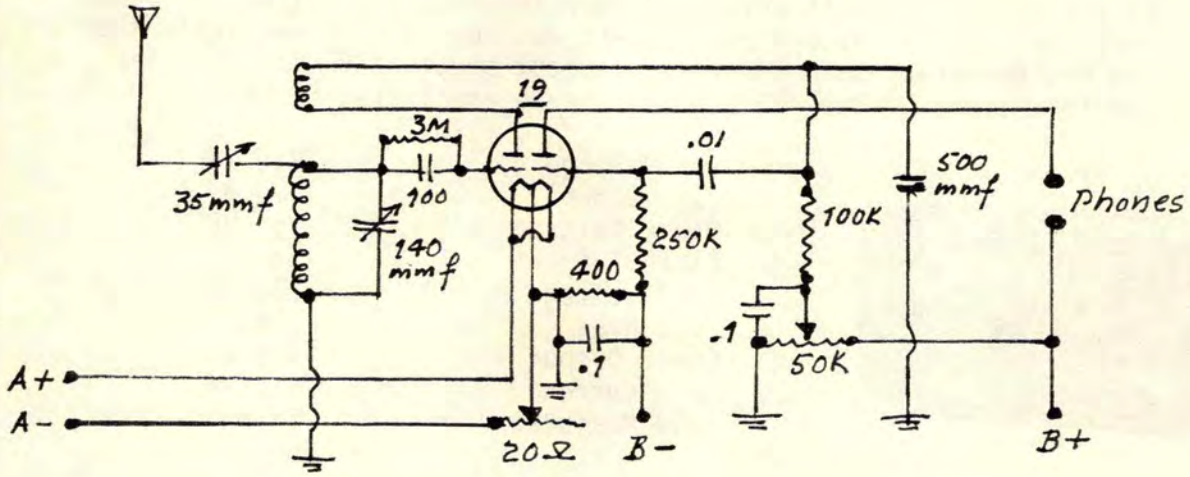

Panel and baseboard layout similar to "Amplidon #2", q.v.

The introduction of the dual-triode opened up a few new avenues of endeavour for the home-constructor, and all media began offering circuits calling for it. Probably the most popular of the dual triodes was the 19, and several circuits were designed around it. The AMPLIDON No. 1 was practically fool-proof, becoming AMPLIDYNE No. 2 in the second version.

The circuit was another collabpration between Wallace and Try-Mo - the former a cup-winner in early Radio contests, and the latter being a mail-order house in NYC. You will find examples of other collaborations between Wallace and Try-Mo in other pages of these SKETCH-Books, and none were really complicated.

* * *

"AMPLIDON NO. 2" (TRY-MO/WALLACE), 1930: Sht. 2

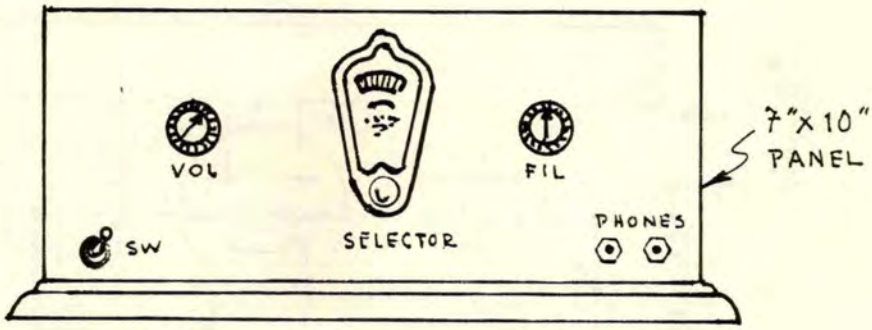

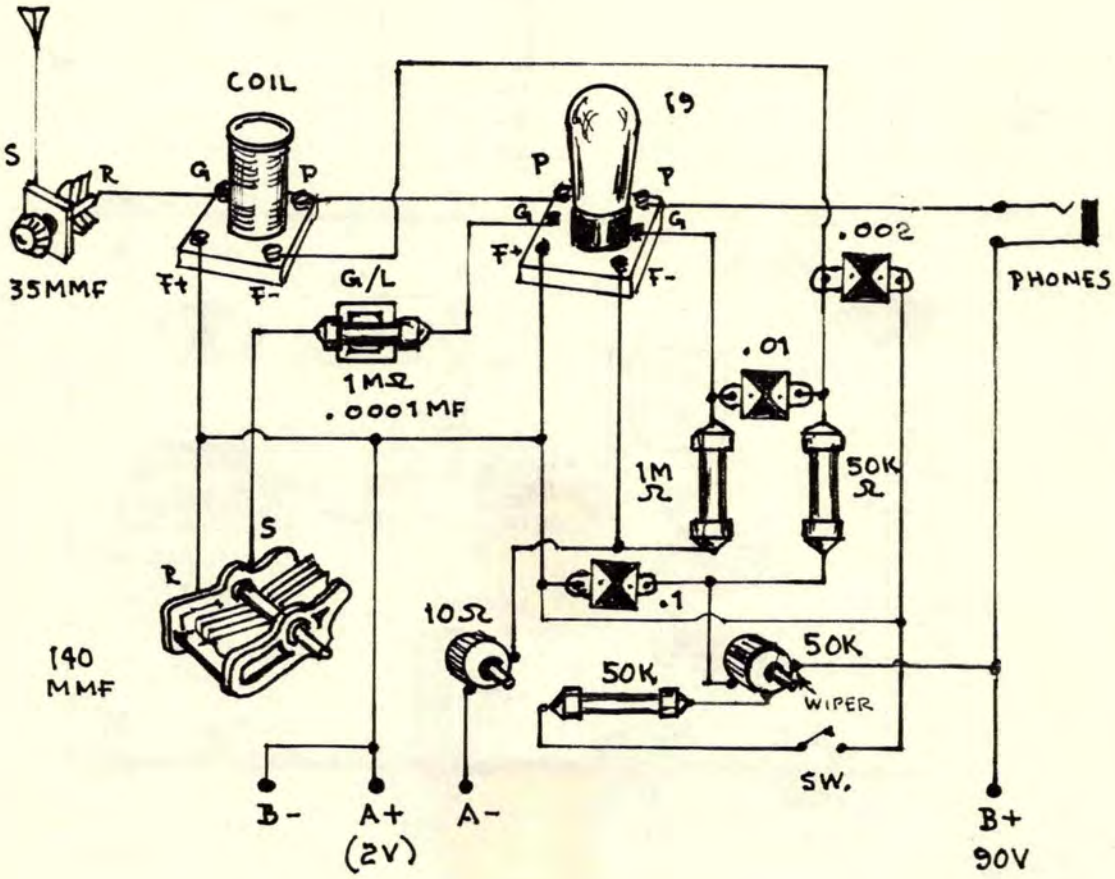

"AMPLIDON" NO. 2 - Sht. 3

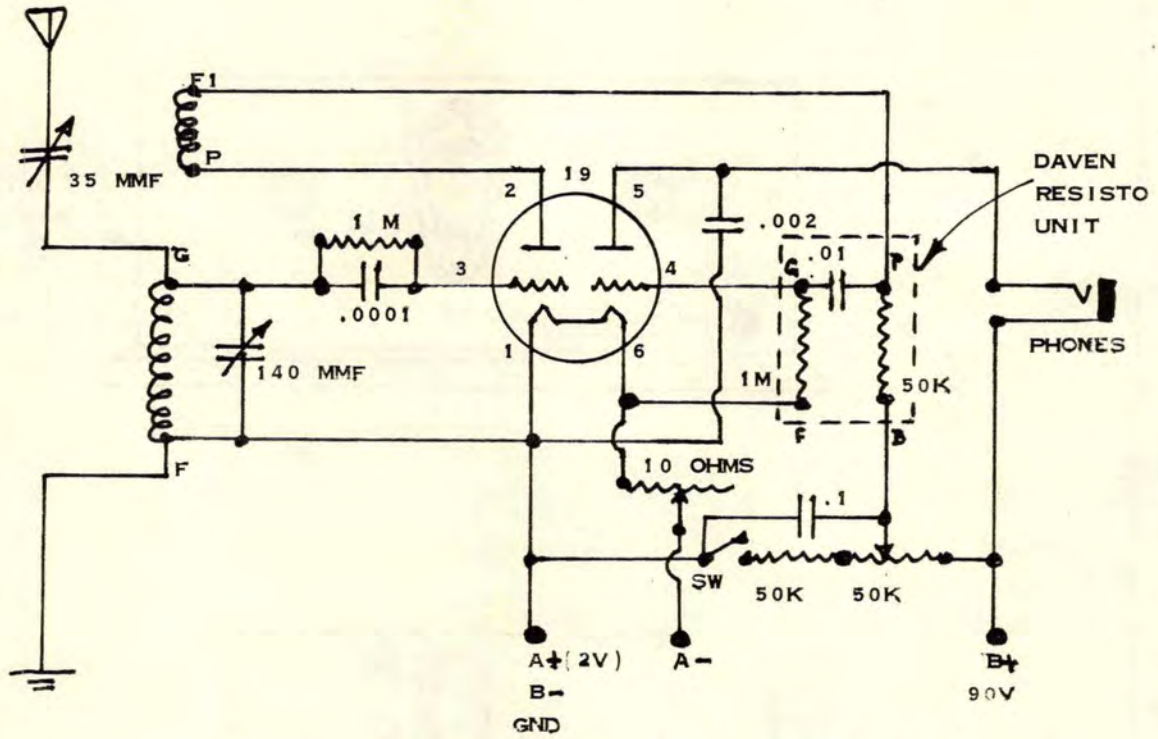

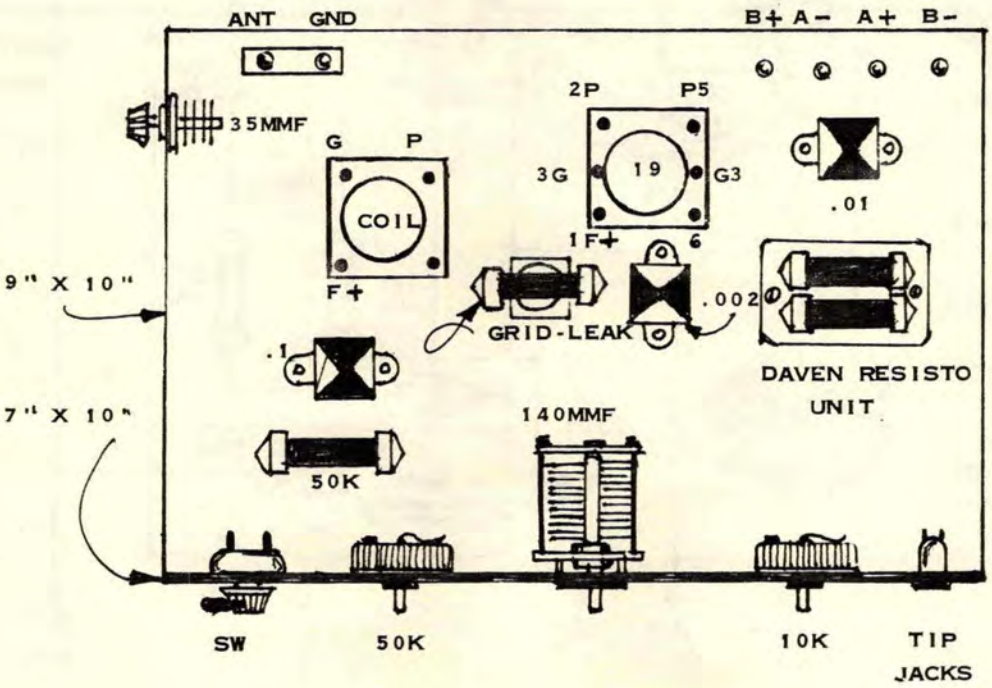

AM-RAD AC-5 NEUTRODYNE RCVR., 1926

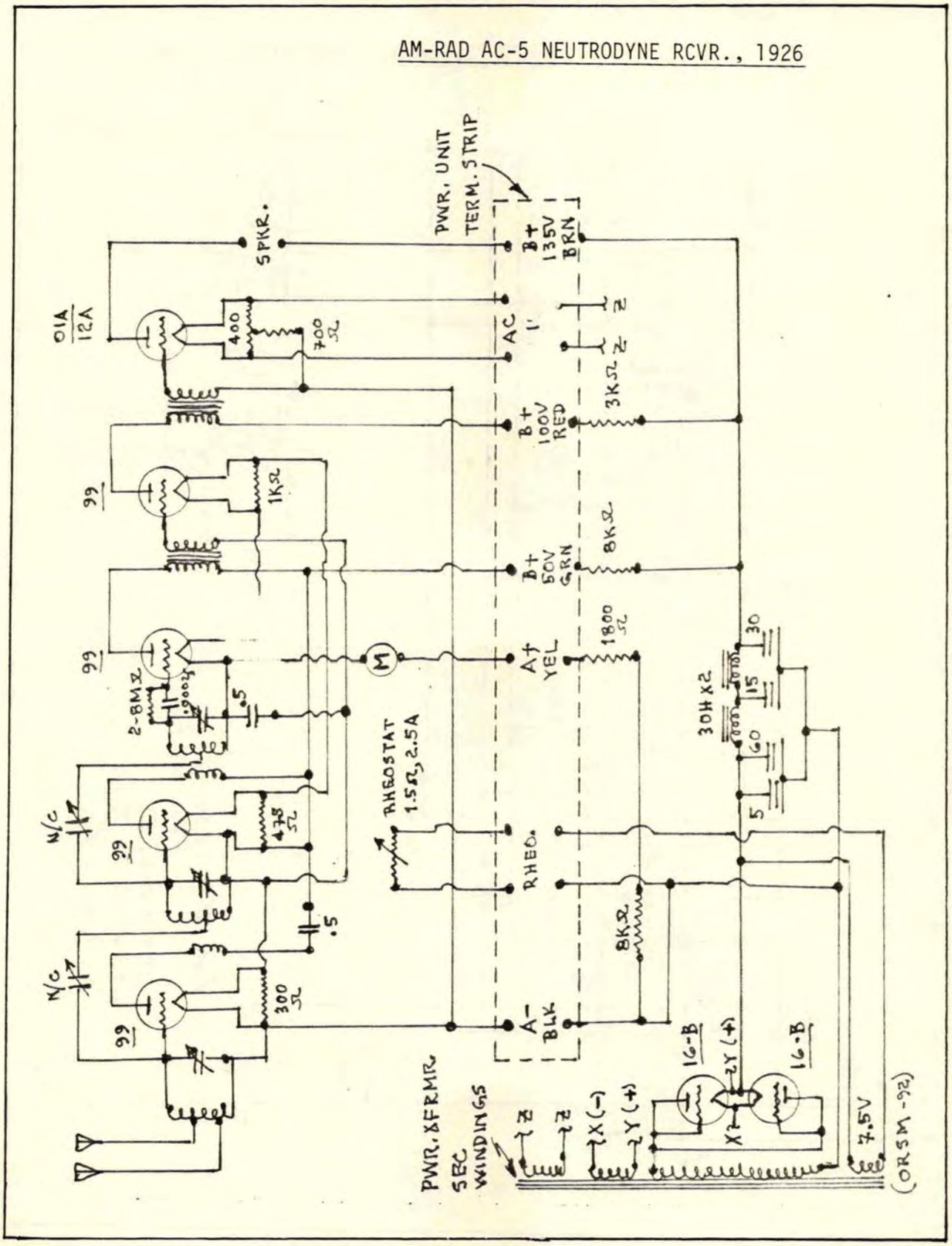

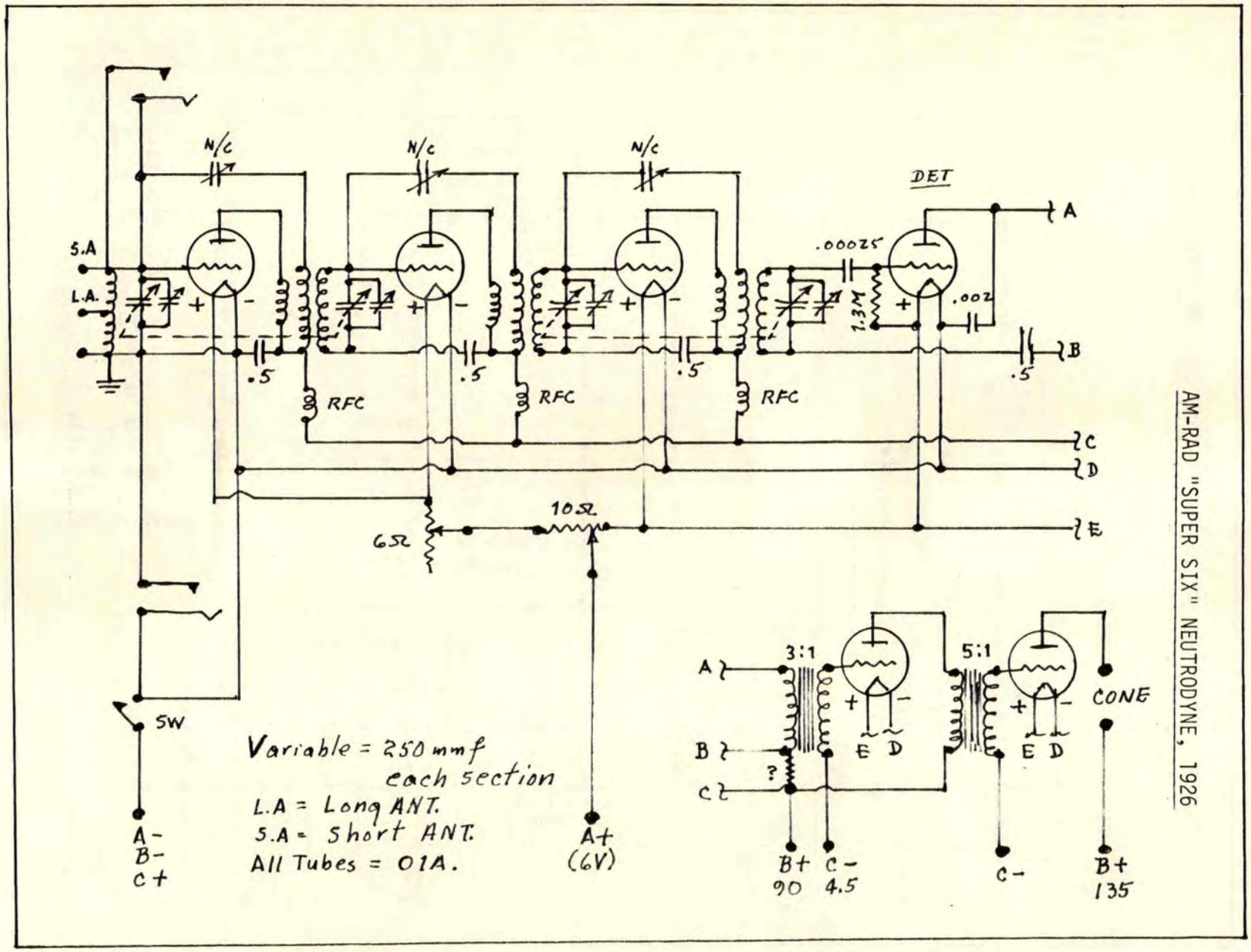

AM-RAD "SUPER SIX" NEUTRODYNE, 1926

ARGUS Model B-125 TRF, 1925

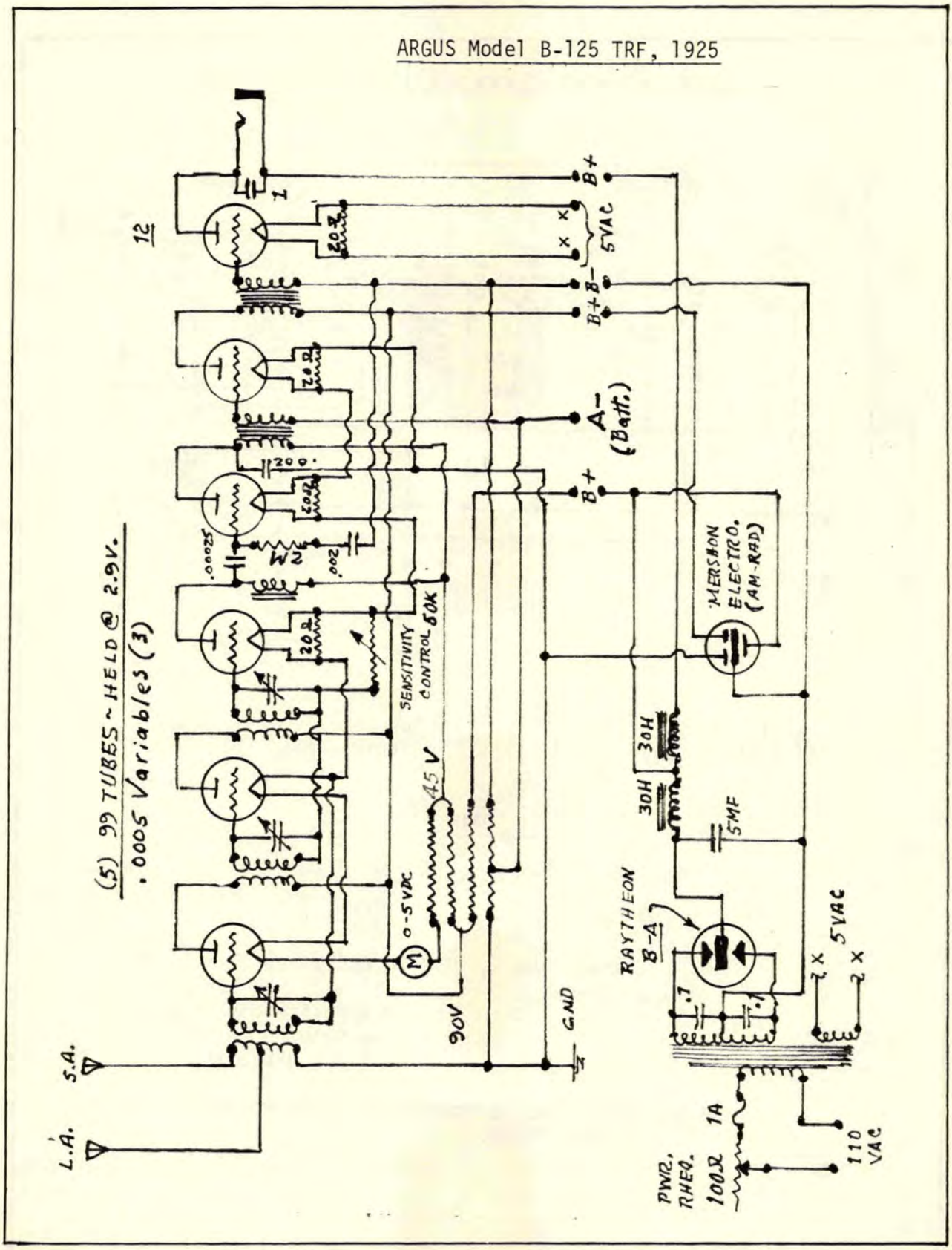

"ARKAY" - NEWARK "Sunday Call" NEWSPAPER, 1925

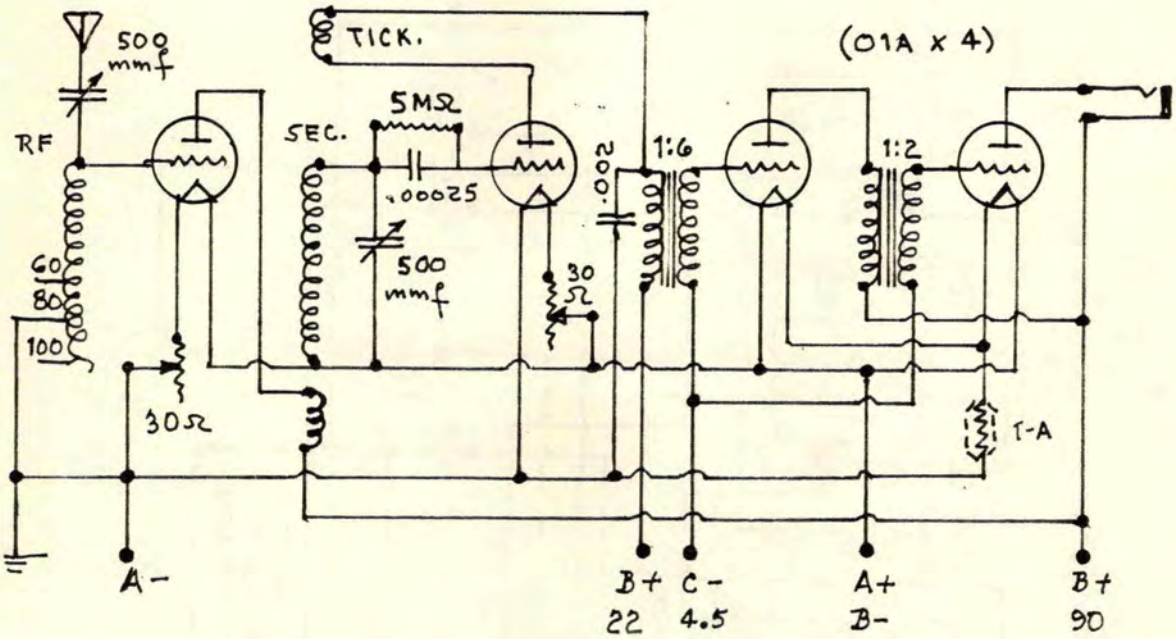

Panel = 7" x 14".
4" Ø Dials (2).

Sub-Panel = 9" x 14".
Binding Posts (5).

COIL DATA

Forms = RF 3" Ø x 4½"; SEC 3" Ø x 3½".

RF Coil	SEC Coil
#22 DCC Wire, 100 T, tapt as shown.	#24 DCC Wire, 14 T, skip ¼", then 45 T in opposite direction; then 9 turns in the original direction.

NOTE: Coils must be mounted at right-angles to each other.

(1001 RQA)

ARMSTRONG SHIELDED SUPER-HET, 1926; Sht. 1

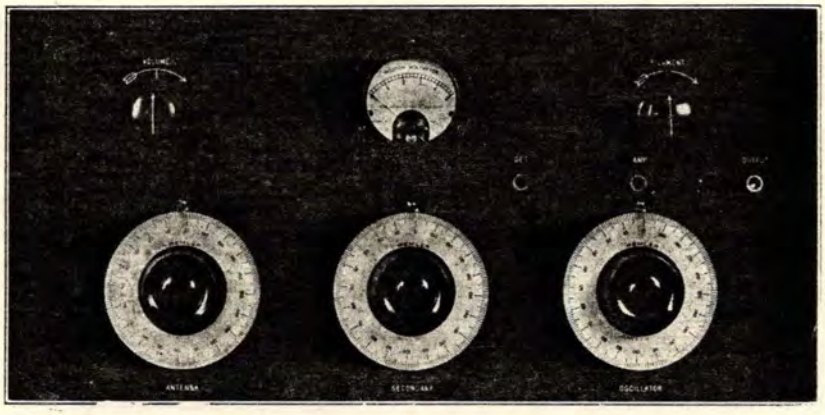

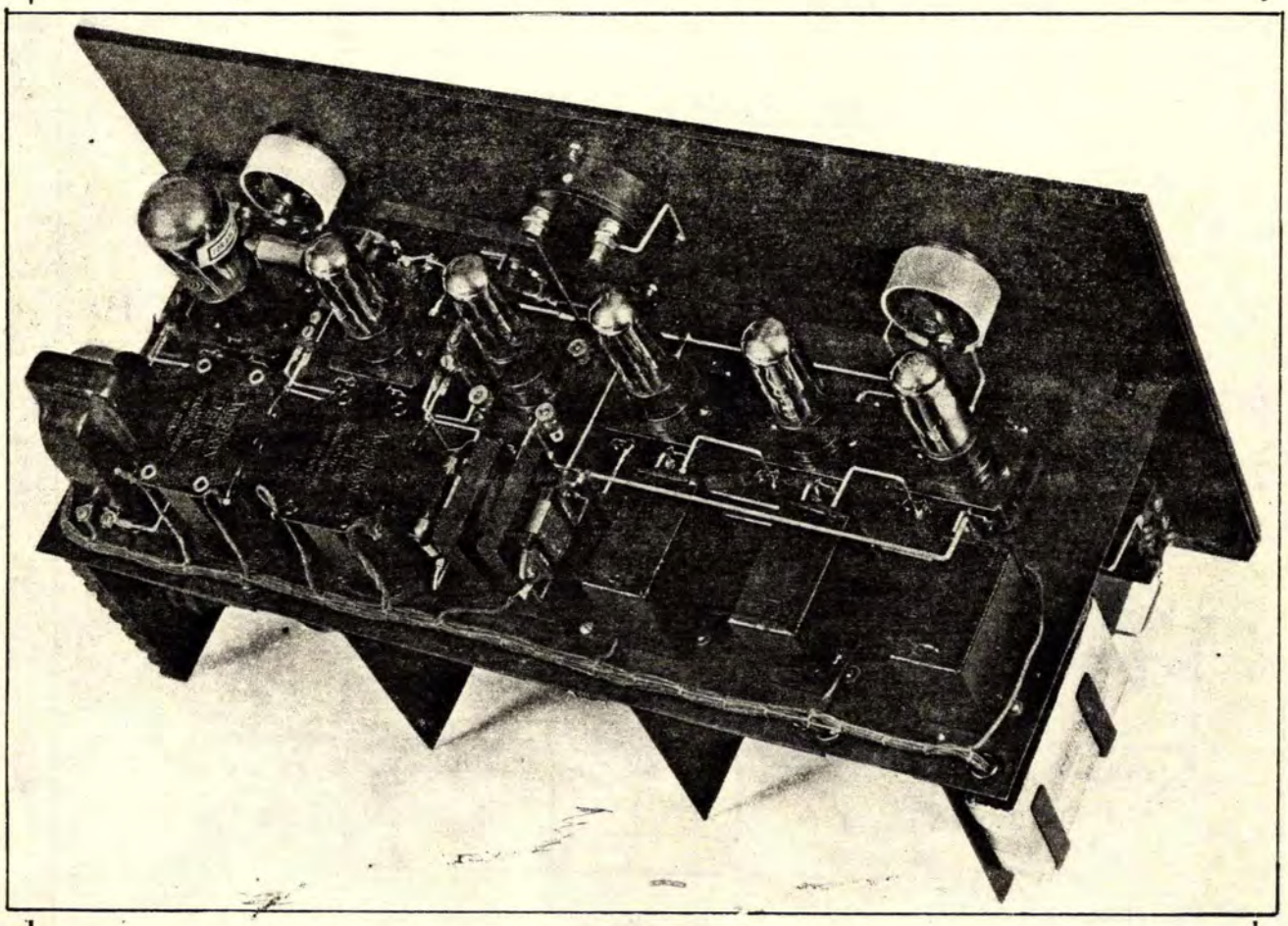

ARMSTRONG SHIELDED SUPER-SIX, 1926; Sht. 2

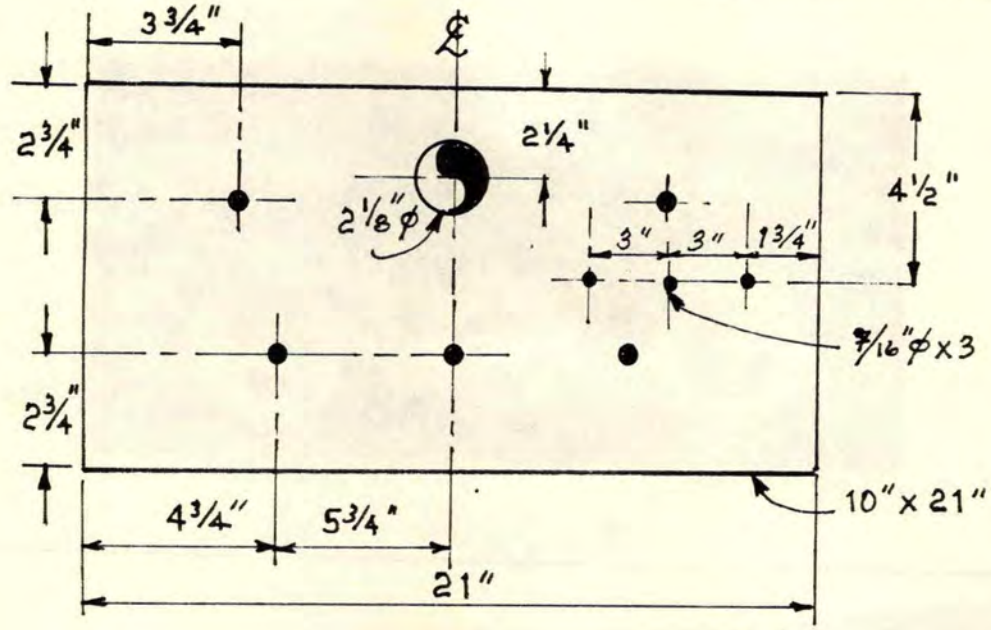

THE PANEL TEMPLATE (stl.)

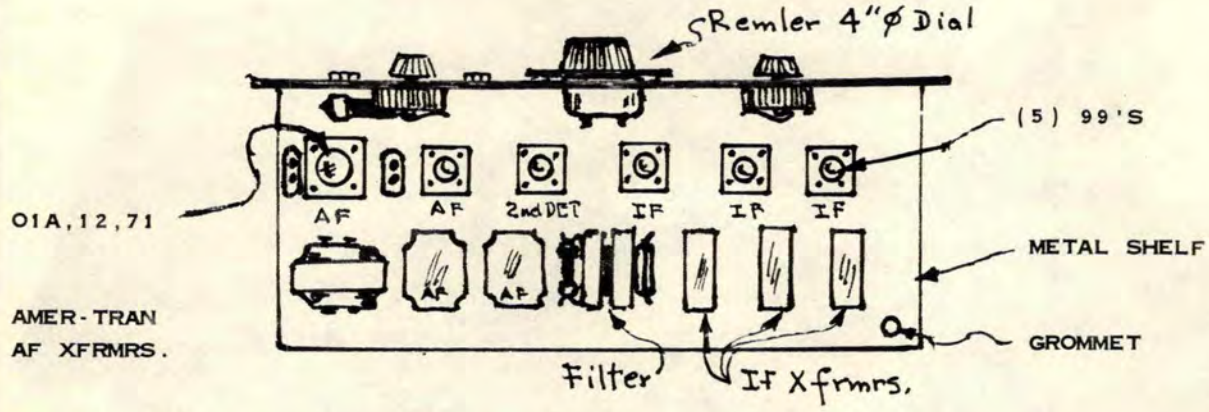

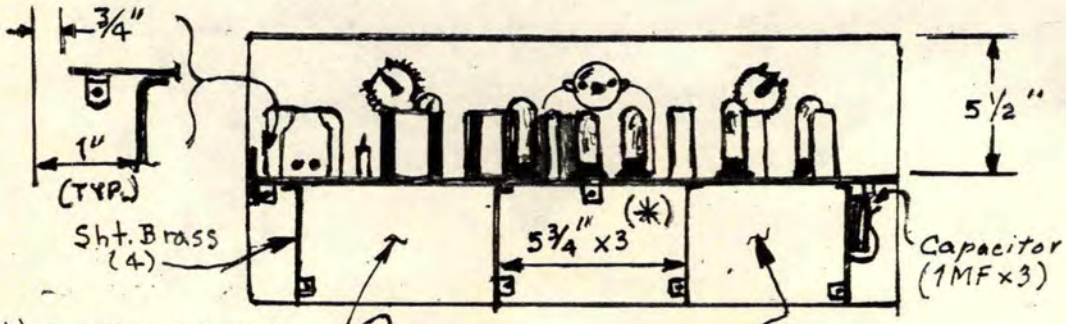

(*) = FREQ. CHANGER TUBE, B-CHOKE

VARIABLE, AF COIL, PLATE CHOKE, FEED-BACK.

OSC COIL, (3) RFC'S, VARIABLE, BY-PASS COND.

ARMSTRONG SHIELDED SUPER-HET, 1926; Sht. 3

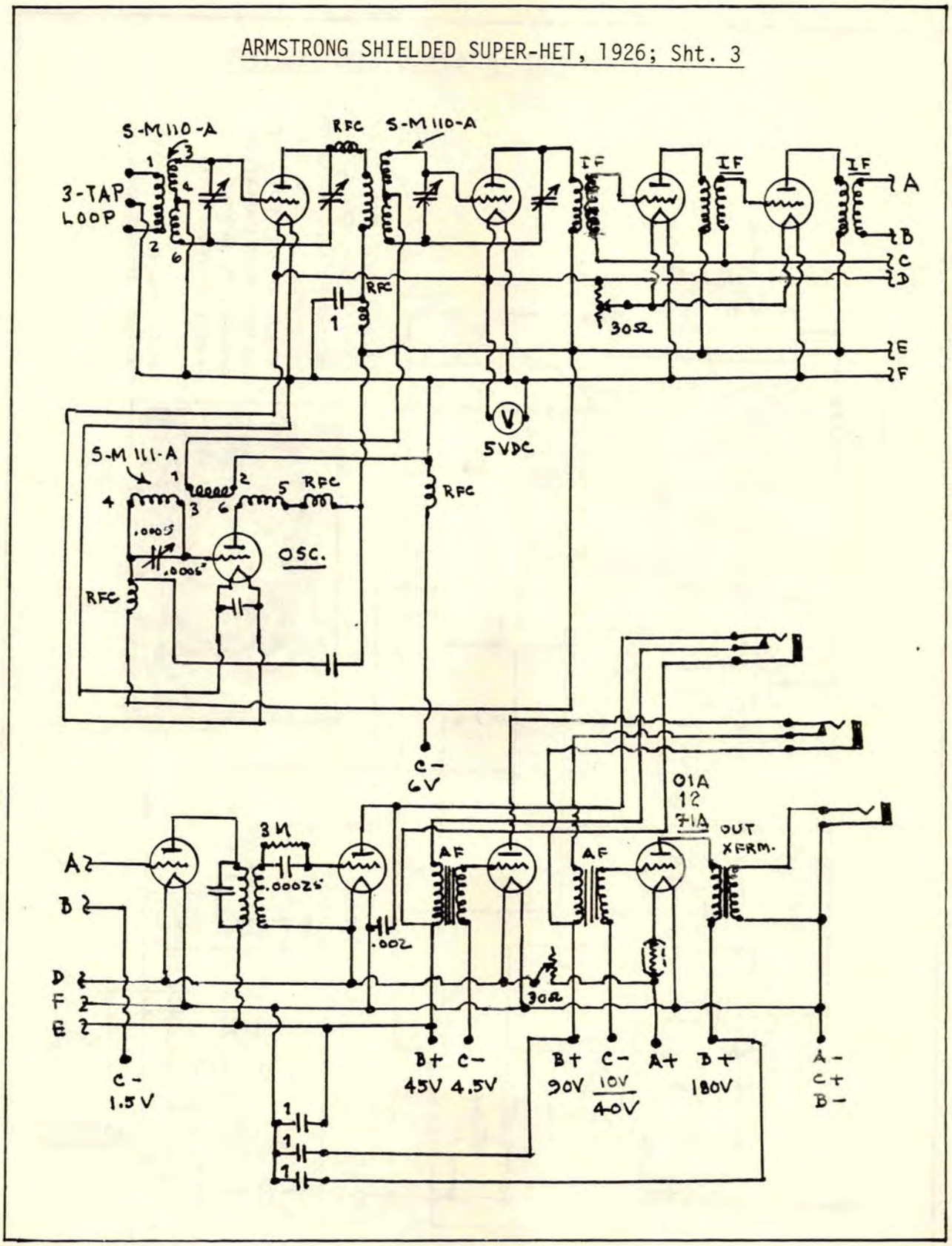

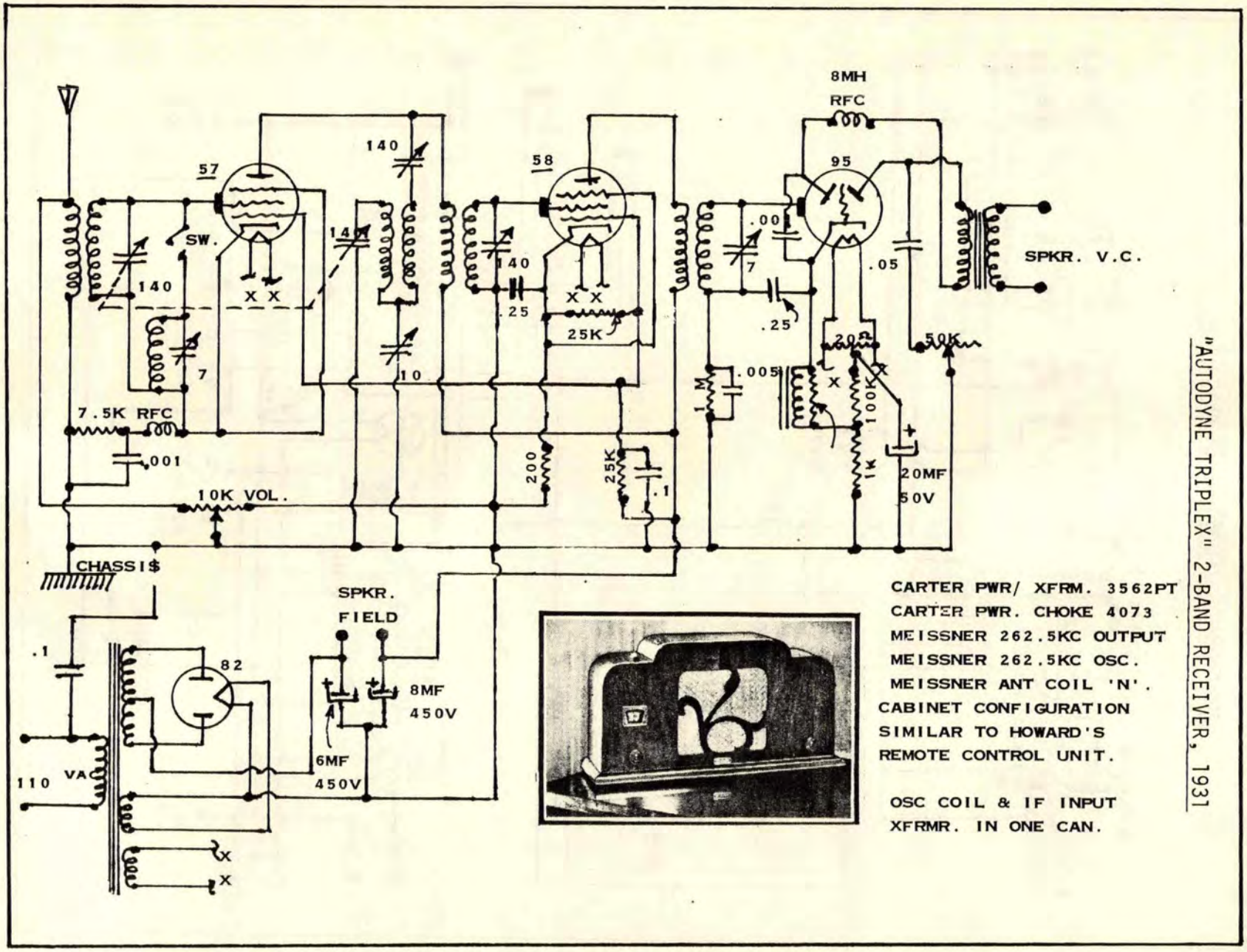

"AUTODYNE TRIPLEX" 2-BAND RECEIVER, 1931

BABY 1-TUBE PORTABLE, 1925
Sht. 1

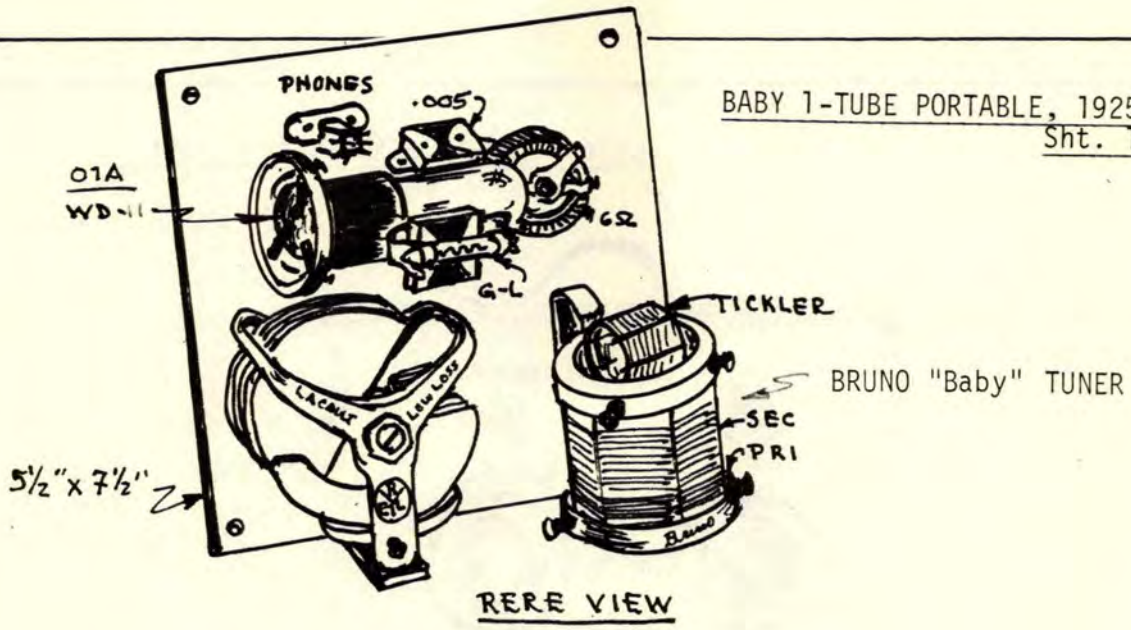

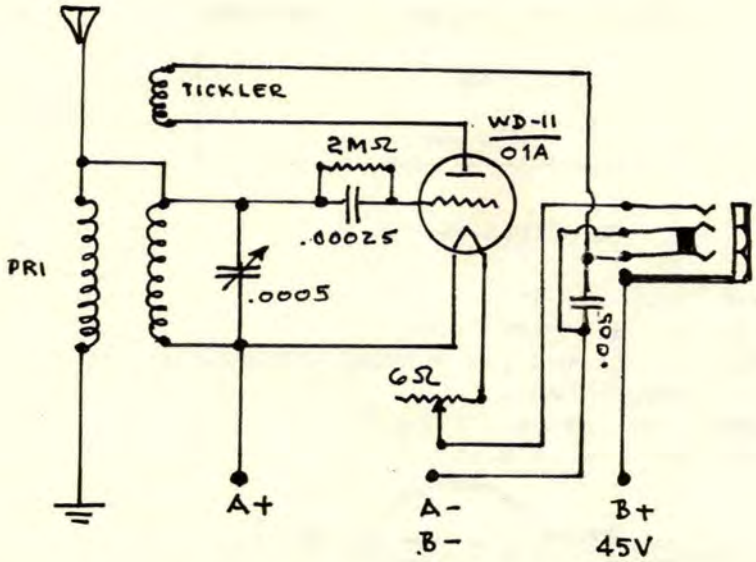

BRUNO "Baby" 3-Circuit Tuner (or Coil Listed Below).

COIL DATA:

Coil Form = 4" x 3" Ø.
6 Terminals; 3 At Each End.
Quartzite Coil Form.
Tickler Coil Form = 2" x 2" Ø.
PRI = #24 SCC; Start at bottom of form,
9 turns, tie; leave .125" space;
SEC = #24 SCC; 52 turns, tie to opposite terminal.
Tickler = 15T + ¼" spacing + 15T.

(RW 5-16-25)

BABY 1-TUBE PORTABLE, 1925; Sht. 2

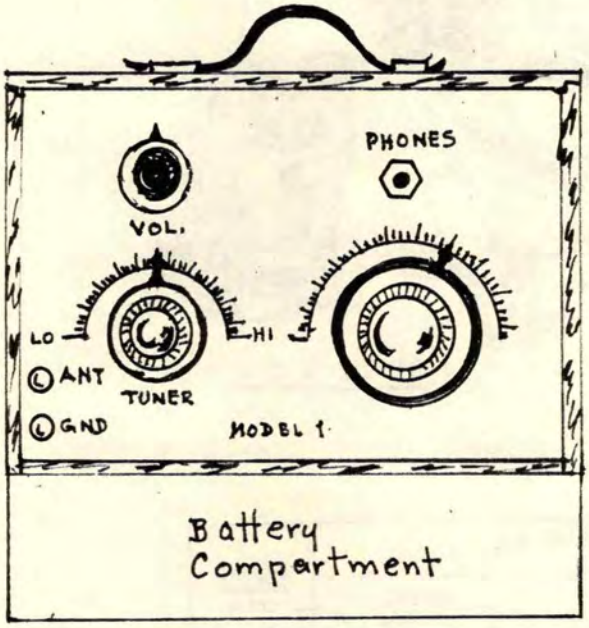

PRINCIPLE PARTS

PANEL 7.5" X 5.5"
BRUNO NO. 99 "BABY" COIL.
LACAULT .005 MFD (23 PLATES) VARIABLE.
NO. 4 SATURN JACK.
KURTZ-KASCH KNOBS.
RHEOSTAT 6 OR 10 OHMS.

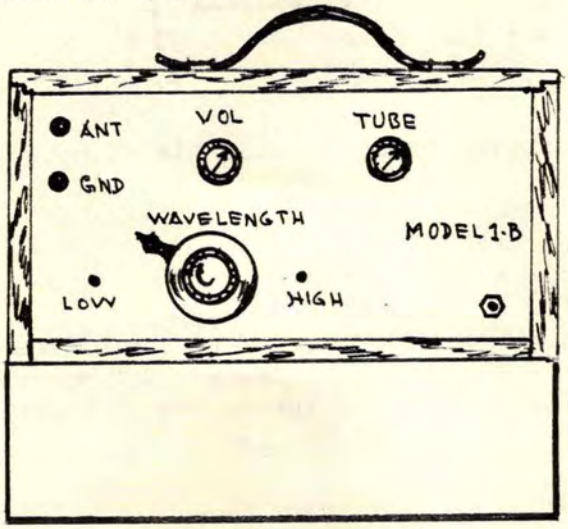

BENSON 3X-SUPERFLEX, 1924; $85

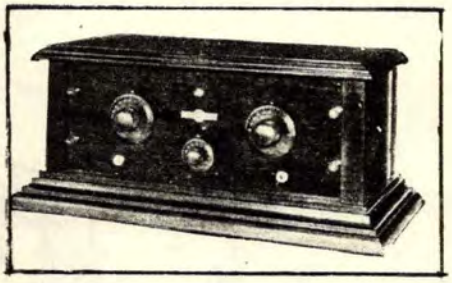

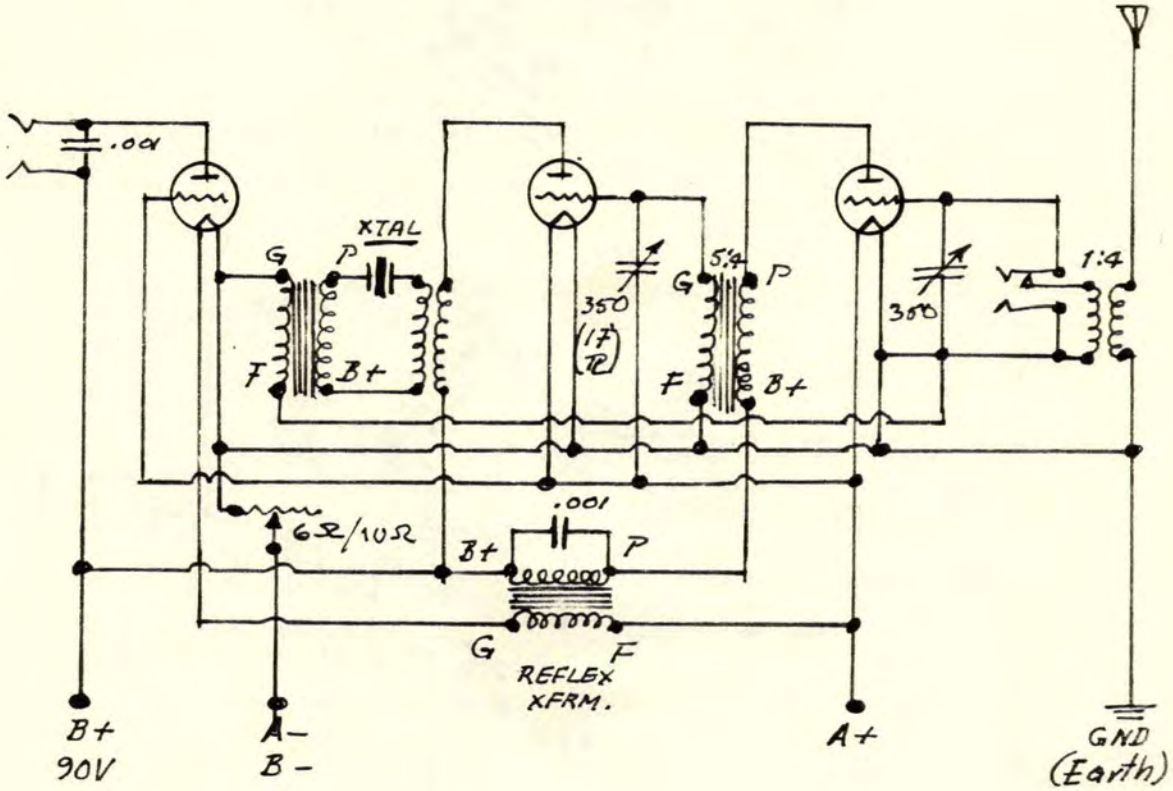

X99 or 01A tubes; rheostat to suit tube used.

(CB Fall - 24)

BERNARD 2-TUBE DX-RECEIVER, 1925

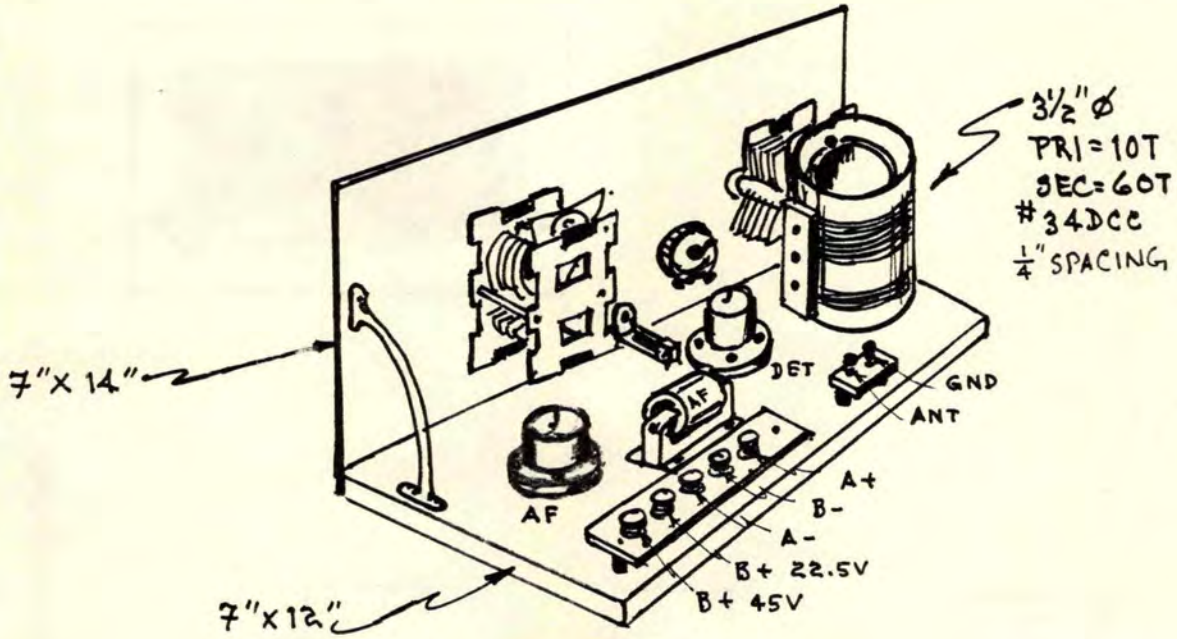

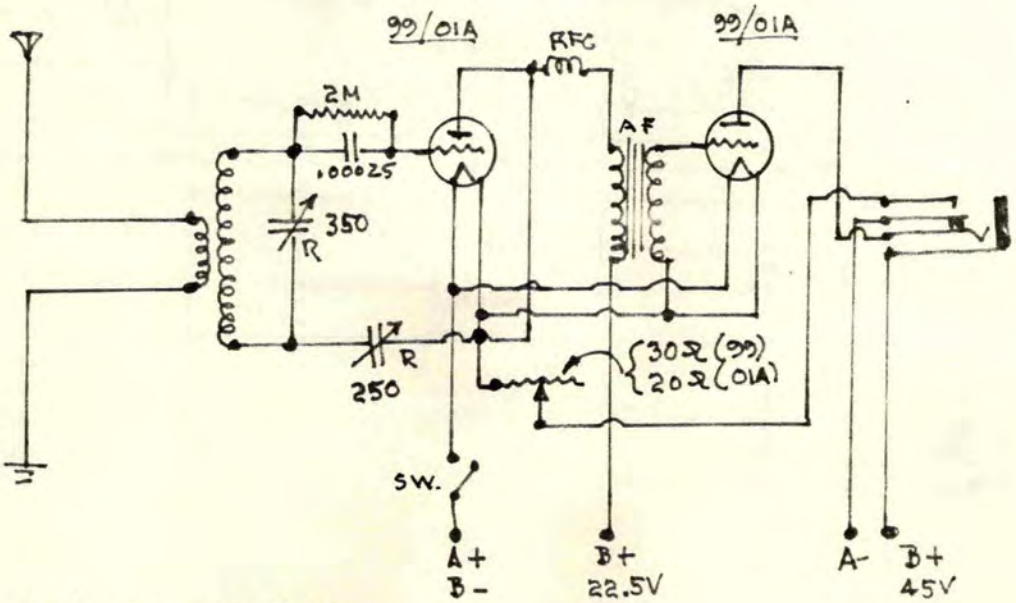

RFC = 135T. #24 DCC, 1½"Ø.
ANT Winding = top of PRI.
SEC to top of both rotors.

(RW 4-10-26/10-24-25)

BERNARD's "DX-SUPERDYNE", 1924; Sht. 1

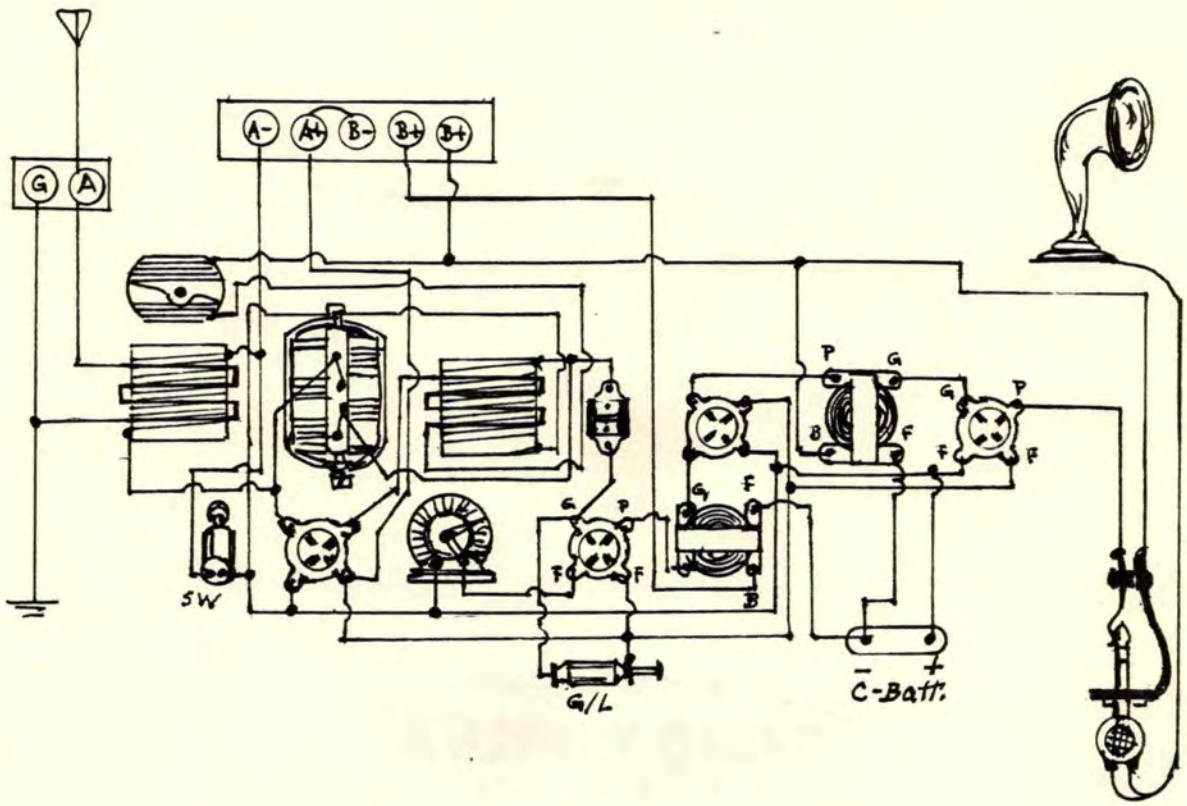

PICTORIAL DIAGRAM

The "DX-Superdyne" was the precursor to the Bernard-Radio World's "Diamond-of-the-Air", which enjoyed a phenomenal popularity for seven years.

(RW 1-25)

DX-SUPERDYNE, 1925; Sht. 2

GENERAL PARTS LIST

1. Bruno #19 Ultra-Vario Condenser.
Stromberg-Carlson #3-A AF Transformers (2).
Federal Sockets (4).
Bradleyleak Variable Grid-Leak.
Bradleystat (rheostat).
Bradley Push-Pull Swiitch.
Eureka Dial Pointers (2) Silver.
Single-Circuit Jack.
01A Tubes (3).
200 Tube.
Tower Headphones or W.E. Horn-Speaker.
#20 DCC Wire, 25'.
Hard Rubber Bushings ½" ø (2).
Supreme Coupler & RF Transformer.
C-Battery 4.5 VDC.
Panel 7" x 24" by Radion.
Mahogany Cabinet to Suit.

THE NAME PLATE

DX-SUPERDYNE, 1924; Sht. 3

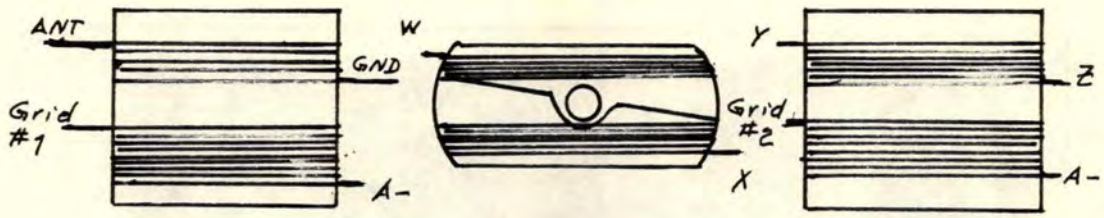

INDUCTANCES USED

W = beginning of Tickler or Rotor coil of coupler.
X = end of "W" winding: connected to "Z" of the RF xfrmr, shown RH above.
Grid #1 = grid connexion to 1st RF tube.

The Superdyne Cycle

"RADIO WORLD'S 1925 MODEL DX SUPERDYNE," by Herman Bernard. Only two controls; 4 tubes. Issues of January 10, 17 and 24.

"A 1-TUBE REFLEXED SUPERDYNE," by Herman Bernard. One stage of tuned regenerative RF, crystal detector and one AF stage, great quality of signals. Good for about 150 miles on earphones. Issue of December 6.

"A SELECTIVE 2-TUBE SUPERDYNE," by Herman Bernard. Fine quality. Good for about 500 miles on earphones. Two RF stages ahead of crystal detector. Very selective. Issue of November 29.

"THE 1-TUBE DX SUPERDYNE," by Herman Bernard. One of the best 1-tube DX sets ever published. Fine signal quality. Issue of December 20.

"THE 3-TUBE DX SUPERDYNE," by Herman Bernard, explaining how to add two audio stages, transformer-coupled, to the 1-Tube DX Superdyne. Issue of December 27. Get December 20 issue, too, for full particulars on the detector circuit

"THE ANDERSON 4-TUBE DX SUPERDYNE," by J. E. Anderson, consulting engineer. One of the most popular and best DX and quality sets ever designed. Issues of November 22 and 29. **TROUBLE-SHOOTING** in December 6 issue.

Any of the above copies at 15 cents each, or start your subscription with any number. RADIO WORLD, 1493 Broadway, New York City.

(RW 1-31-25)

HERMAN BERNARD's "DIAMOND-OF-THE-AIR", 1925;Sht. 1

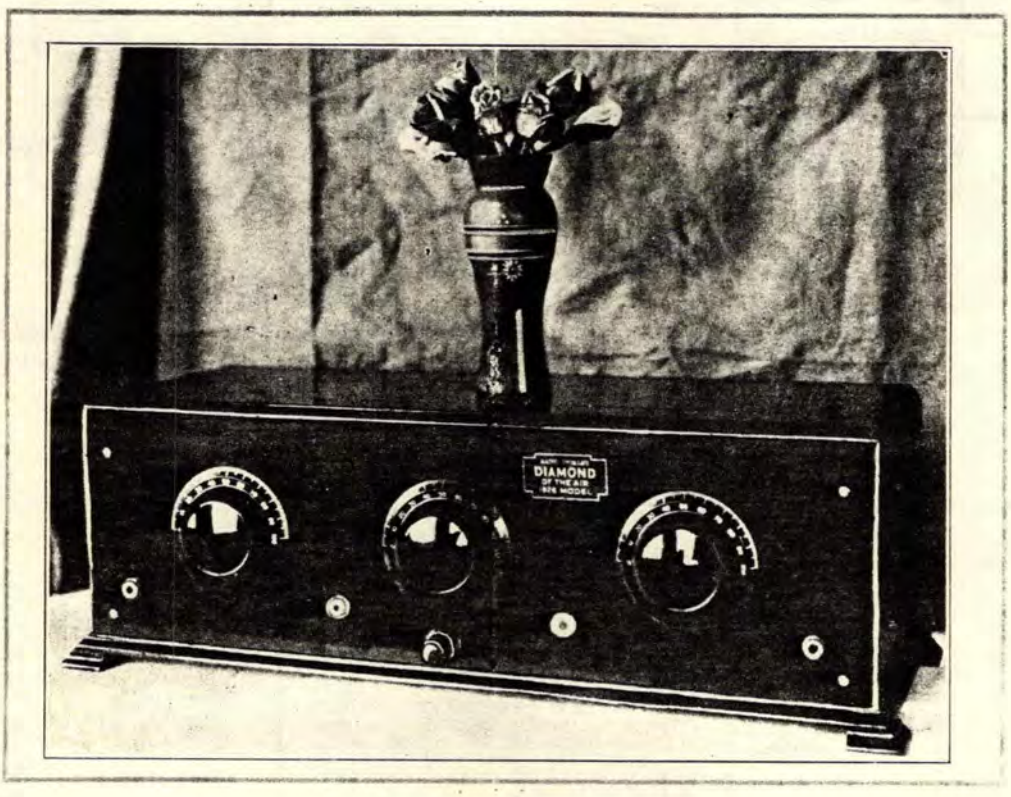

Having been surprised by the enthusiasm for his "Superdyne", Herman Bernard developed it into the "Diamond Of The Air", and was equally surprised at the popularity of the set, in its various forms, for almost seven years. The average life of circuits made popular by radio media was on the order of two and a half years.

Bernard joined RADIO WORLD in 1924 as Associate Editor, Technical Editor, Radio Consultant - plus a few more titles that seemed to appeal to him. RADIO WORLD was a weekly, the only one of its kind in the field, and for seven years it was rare to pick-up an issue and not find something by Bernard. He designed the "Superdyne" in March of 1925, and with the "Diamond Of The Air", he created the first cult marque among home-constructors. There were at least fifteen variants of the basic circuitry, and you will find representative circuits herein.

RADIO WORLD offered a brass name-plate to anyone who would construct the "Diamond". and then write to the editor, preferably with

laudatory comments. The magazine then took to publishing listings of all those who had built the "Diamond" and had praised it, thereby becoming members of the "Diamond" club.

The only other marque to have a club and devoted followers was the very fine "Victoreen". The difference between both "clubs" was that Bernard deliberately set out to create a mystique anent the various "Diamonds", while the "Victoreen" club sprang up spontaneiously across the country....proving once again that the rise of Radio was a distinct socio-technical phenomenon.

The chief virtues of the "Diamond" lay in its simplicity, on the one hand; and its low cost to construct. With most home-constructors buying their radio hardware from shops such as Woolworth and Kresge, it was a shrewd decision.

Bernard, while still with RADIO WORLD, became associated with BRUNO, a mail-order house that did its own manufacturing, and did produce a few quality parts. They were, naturally, the supplier of "Diamond" parts, both in kit form and individual components. Costing originally over $51, the kits subsequently came down to $21, as sales increased.

The "Diamond" is still easy to construct and it does work remarkably well, even by modern standards. Why not have a go at constructing one for yourself?

* * *

THE FIRST "DIAMOND-OF-THE-AIR", 1925; Sht. 2

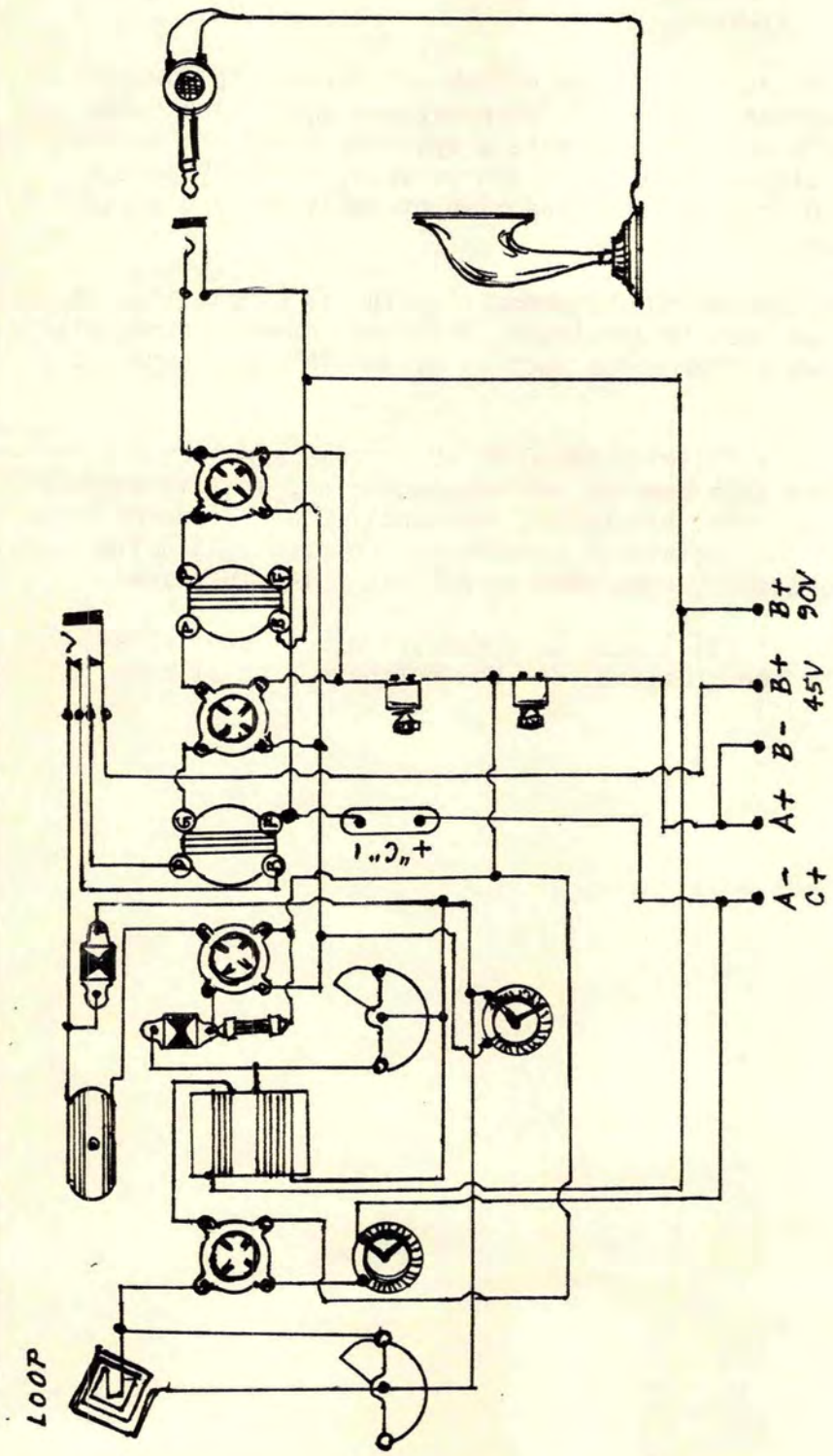

PICTORIAL DIAGRAM

REFER TO SHT. 3 FOR A CONVENTIONAL SCHEMATIC.

"DIAMOND OF THE AIR", 1925; Sht.3

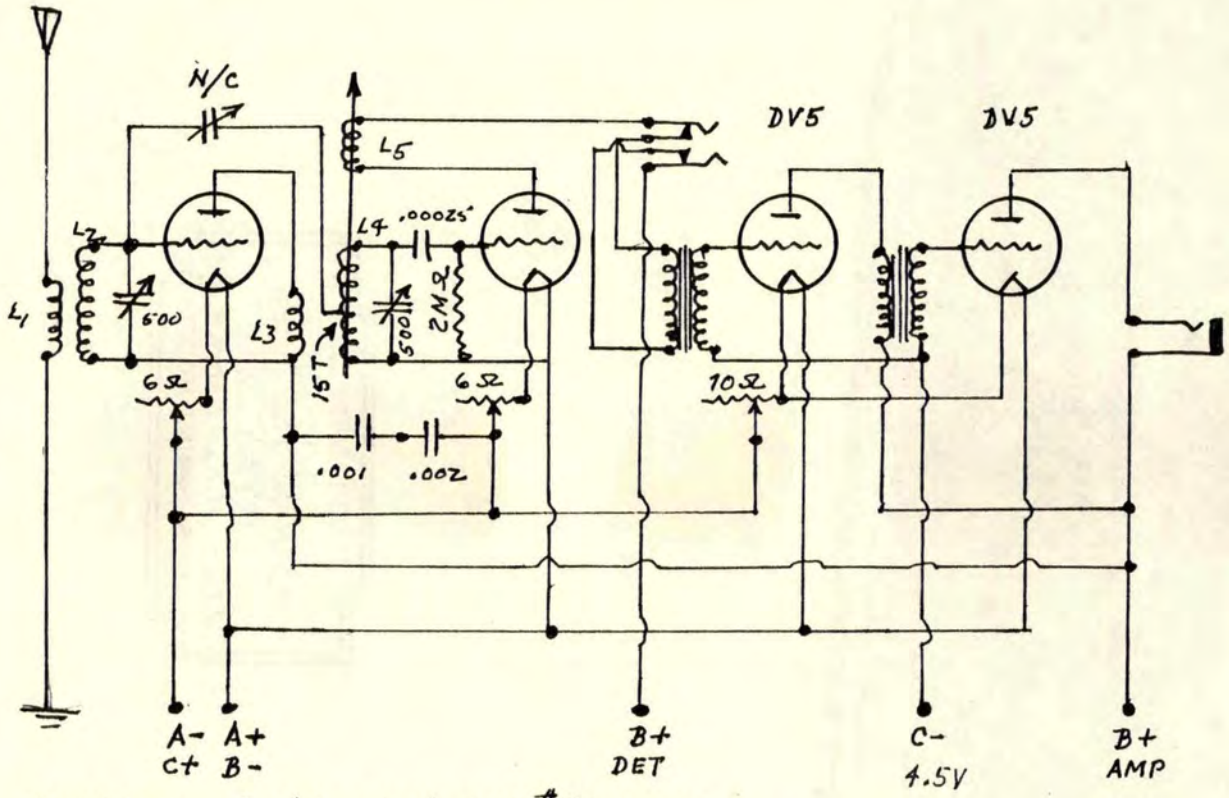

COIL DATA: L_1 & L_3 = 12 to 15T, #22 SCC; L_2 & L_4 = 45T, #22 SCC; } Form = 3½"ø x 3".
L_5 = 30T, #24 SCC; Form = 2"ø x 2½".

"DIAMOND-OF-THE-AIR" VARIANT, 1925; Sht. 1

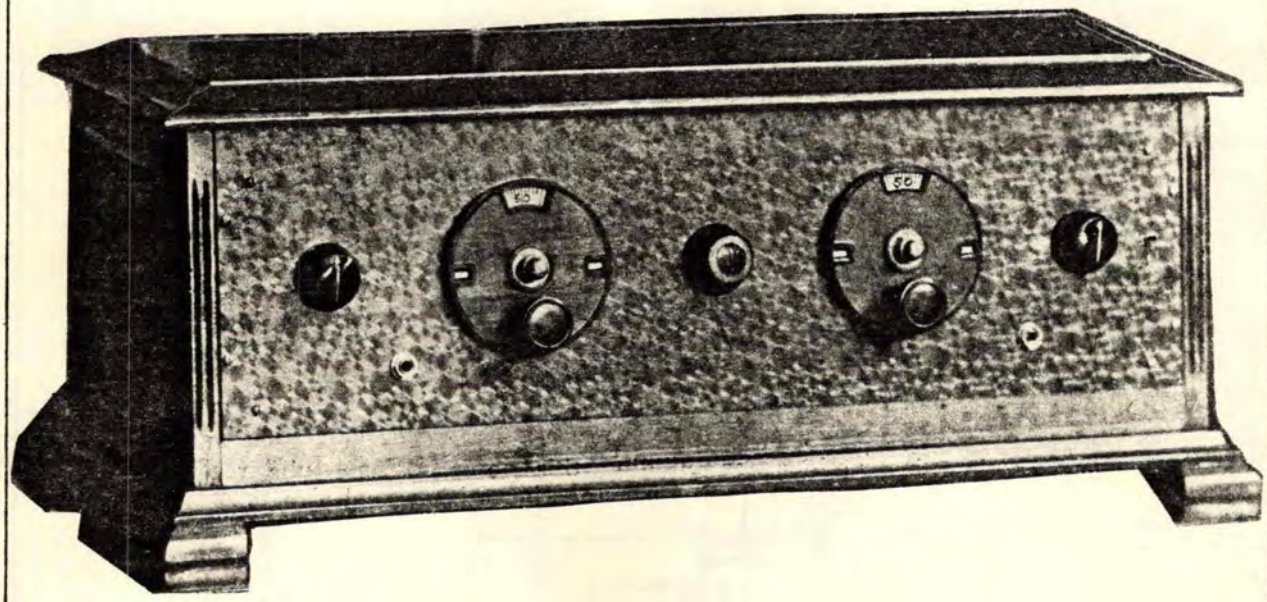

RADIO WORLD'S
DIAMOND
OF THE AIR
"A Gem, A Jewel and A Joy"
1925 SPRING MODEL

"DIAMOND-OF-THE-AIR" VARIANT, 1925: Sht.2

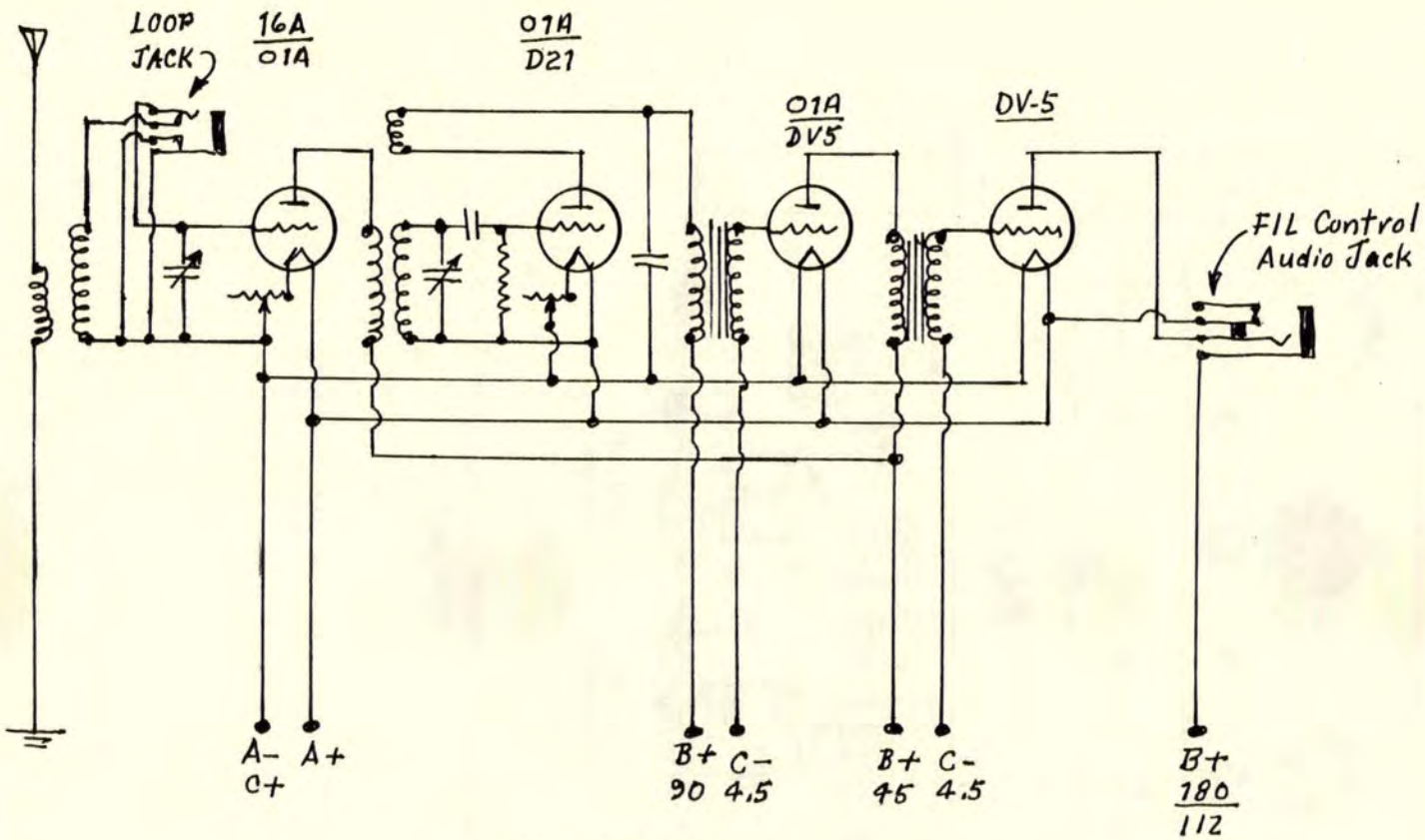

D21 - SODION TUBE.
DV-5 - DEFOREST AMP. TUBE.
16A - RCA AMP. TUBE.

Original "bug" designed for the "Diamond", but quickly abandoned in favour of a free decalcomania name-plate, derived from the name-plate for the "Superdyne".

THE DIAMOND AS A REFLEX, 1925; Sht. 1

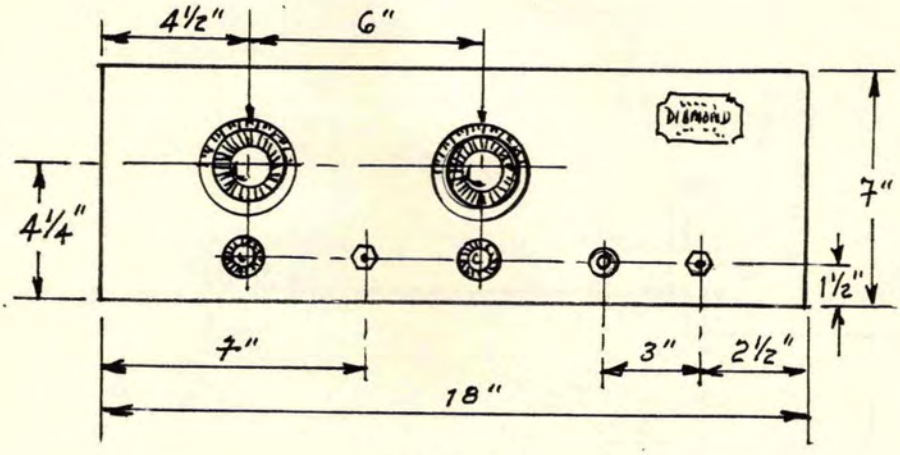

PANEL

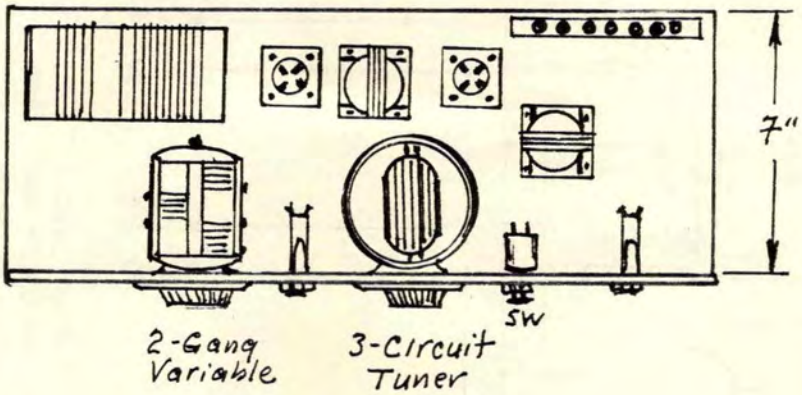

Simultaneous reception was possible from both jacks.

THE DIAMOND AS A REFLEX, 1925; Sht. 2

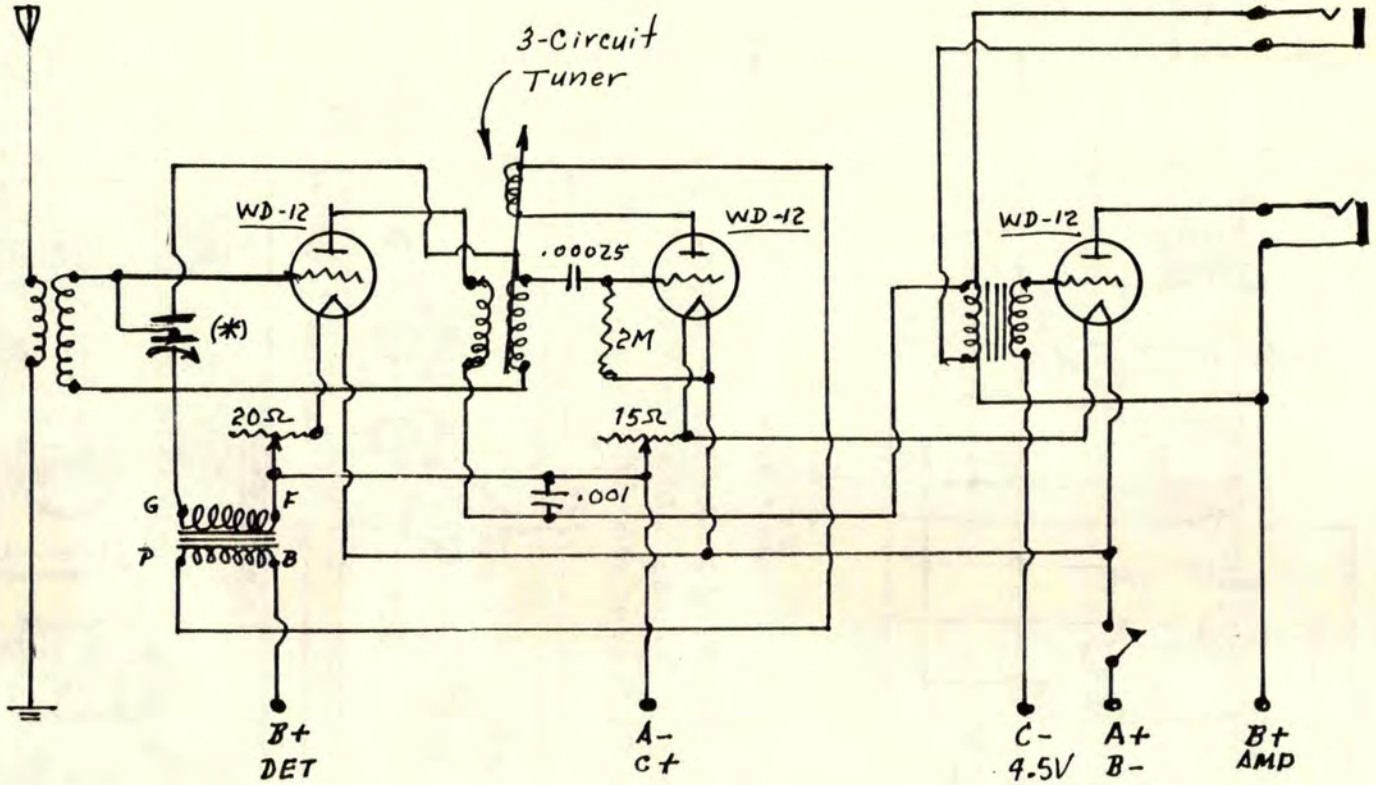

(*) = 100 MMF VARIABLE, 50 MMF EACH SEXION.

PANEL 7" X 18"

ORIGINAL AF XFRMRS. RECOMMENDED WERE ACME, GEN-RAD, STROMBERG-CARLSO, FEDERAL 65 & 65A, JEFFERSON, OR RAULAND "ALL-AMERICAN".

(RW 6-25)

THE 2-CONTROL DIAMOND, 1925; Sht. 1

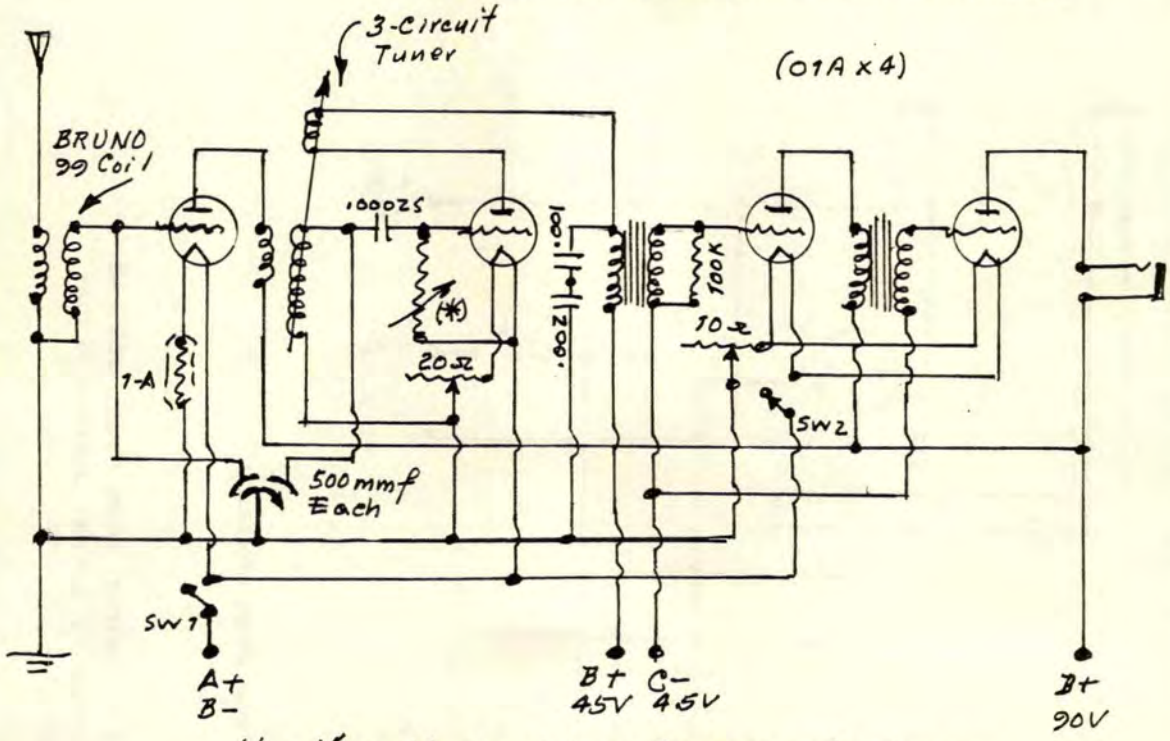

(*) = Variable Grid-Leak (BRETWOOD); ohmage range is/was .10Ω to 10MΩ.
Switch SW2 controls AF tubes (optional).

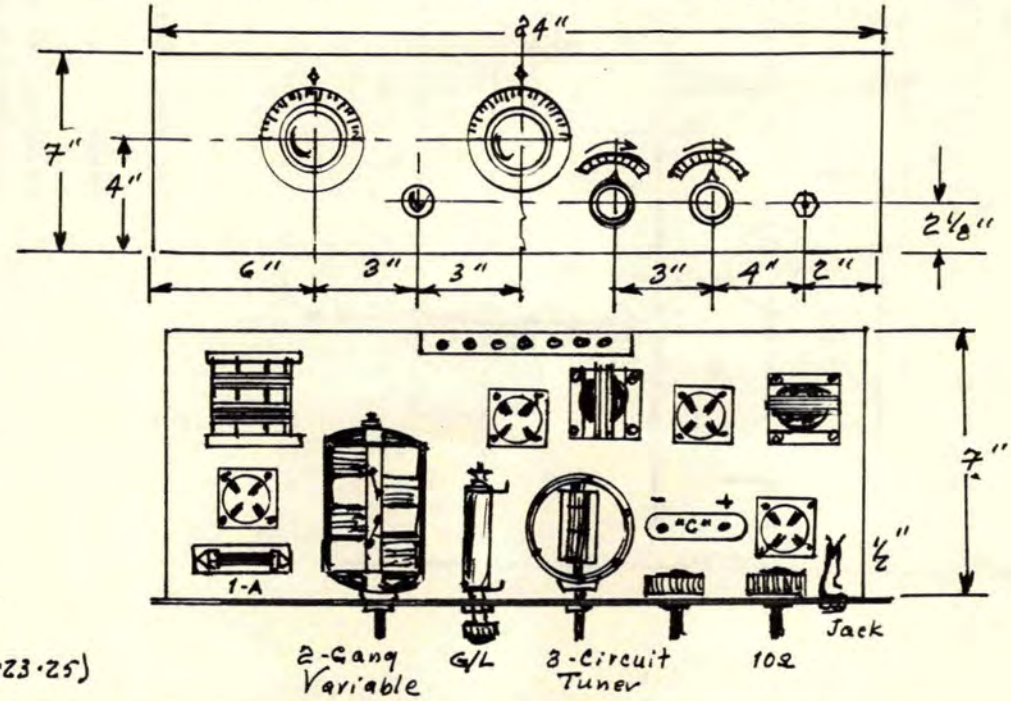

(RW 4·23·25)

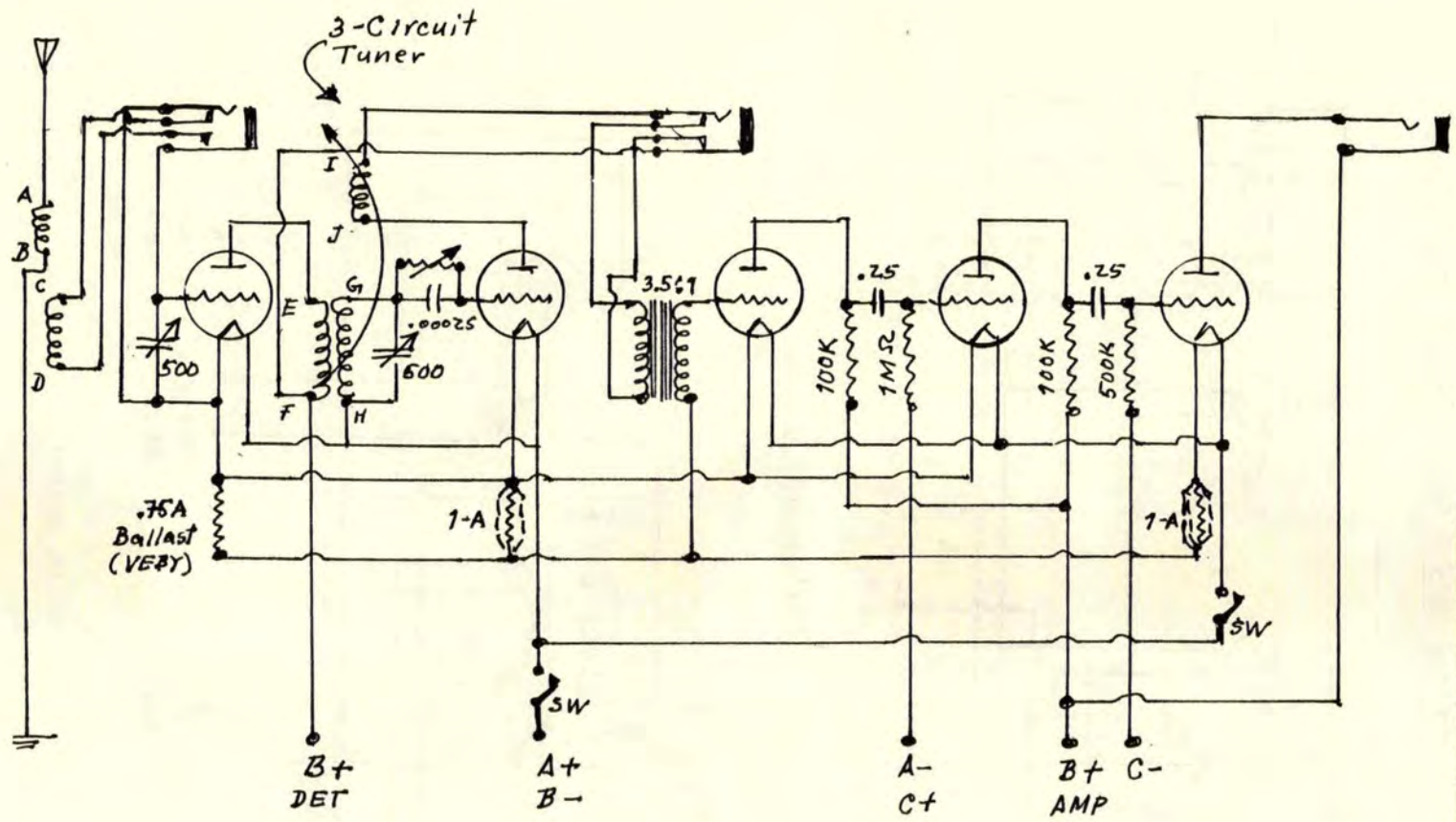

1926 DIAMOND, 2nd VERSION, 1926

PRINCIPLE PARTS

BRETWOOD VARIABLE GRID-LEAK.
BRUNO 99 COUPLER.
BRUNO TUBE-SOCKET SHELF & BRACKETS.
BRUNO 3-CIRCUIT TUNER.
NA-ALD UX SOCKETS (5).
KURZ-KASCH 4" DIALS.

(RW 11-21-25)

COMPARISON OF THE 1925 & 1926 "DIAMOND OF THE AIR"

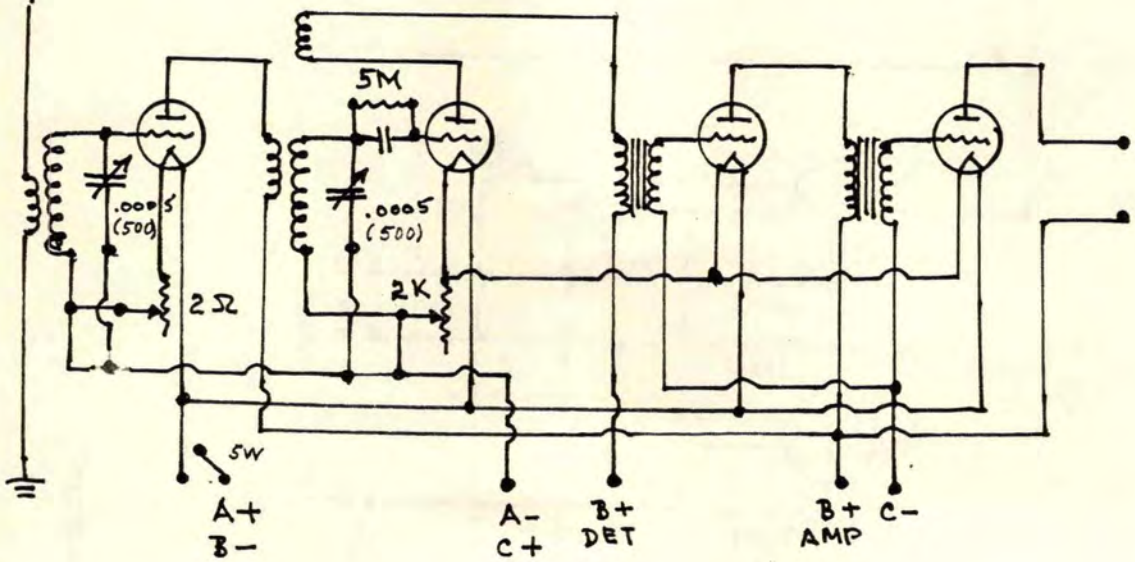

1925 model

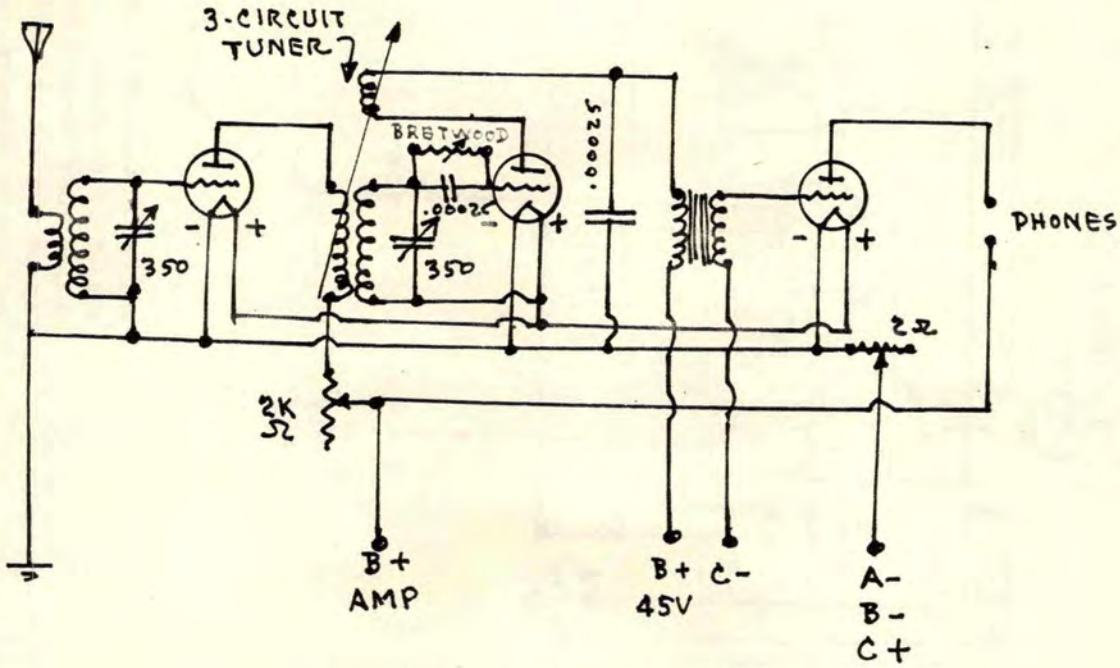

1926 model

(RW 10-16-26)

A Boxed and Sealed

DIAMOND OF THE AIR KIT $35.00

(With Official Blueprint)

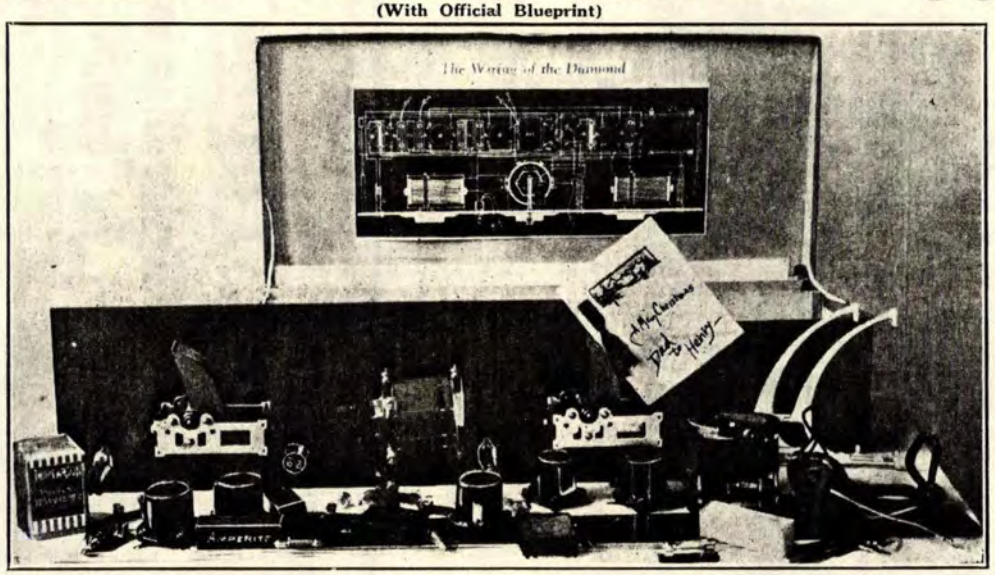

Each kit bears the personal signature of Herman Bernard, the designer of this famous circuit and is your guarantee that all the parts used are matched and will function with precision to obtain the best possible results.

The first commercialisation of the Diamond-of-the-Air, kitted by B.C.L. (Broadcast Listener's Radio Service), of N.Y.C. There was a relationship between Bernard and Bruno and Radio World, which endured for several years during which time Bruno kits were also featured. You might like to compare the Bruno "Powertone", "Unitune" and "DX-Superdyne" circuits for strong similarities.

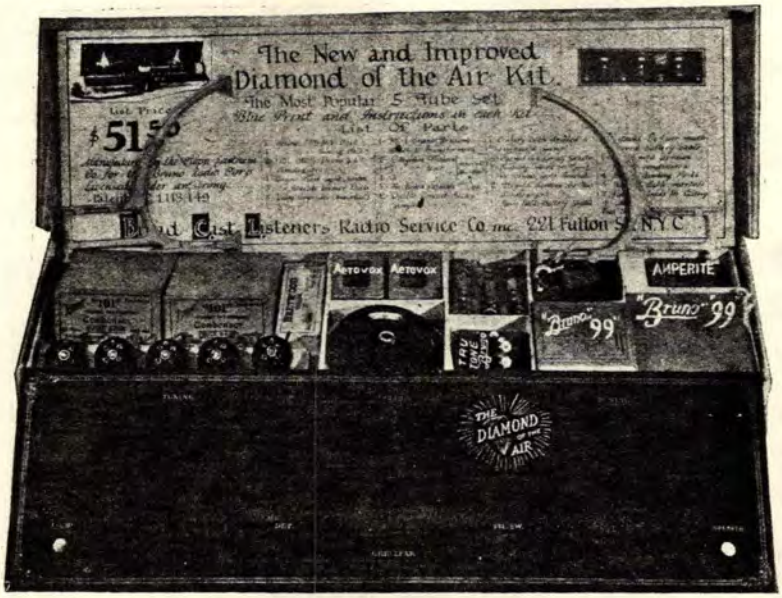

KIT VIEW OF THE DIAMOND OF THE AIR

Manufactured by the CLAPP-EASTHAM CO., for BRUNO RADIO CORP.

"Bruno"

Basic Diamond Kit $20.00

Once in a lifetime a Man reaches the position of being an authority on a certain subject; when *that Man* specifies a particular something *that* something goes. Herman Bernard is that type of Man. He made a suggestion, and when Herman Bernard makes a suggestion *it's good*. Thereby hangs the reason for the NEW "Bruno" Basic Diamond Kit.

THE 4-TUBE DIAMOND, 1926; Sht. 1

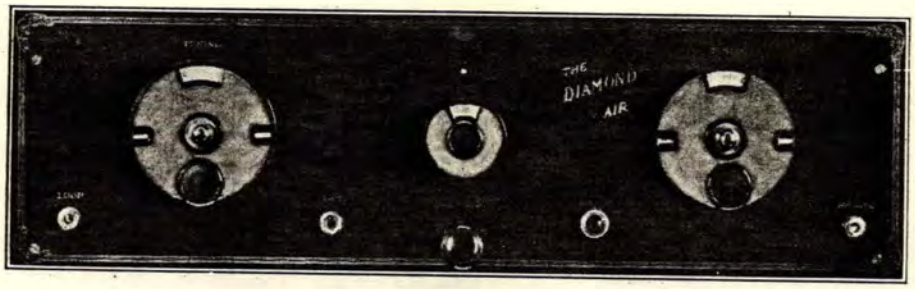

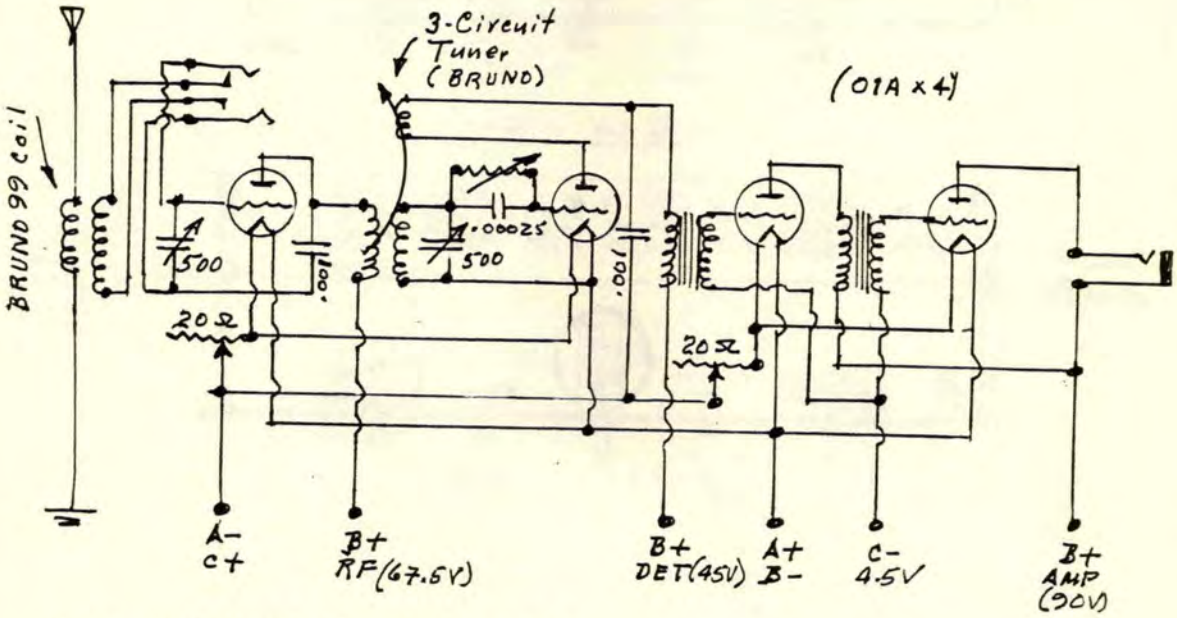

Bretwood Variable Grid-Leak.

NOTE

ALL BRUNO COILS USED LETTERS AS TERMINAL DESIGNATIONS.

A - BEGINNING OF APERIODIC PRI.
B - END OF A.
C - BEGINNING OF SEC & SEC TERMINAL ADJOINING B.
D - END OF C.
E - BEGINNING OF RF PLATE COIL.
F - END OF E, CONNECTING TO B+ (67V).
G - BEGINNING OF DET INPUT SEC, CONNECTING TO A+.

(RW 11-20-26)

THE 4-TUBE DIAMOND, 1926; Sht. 2

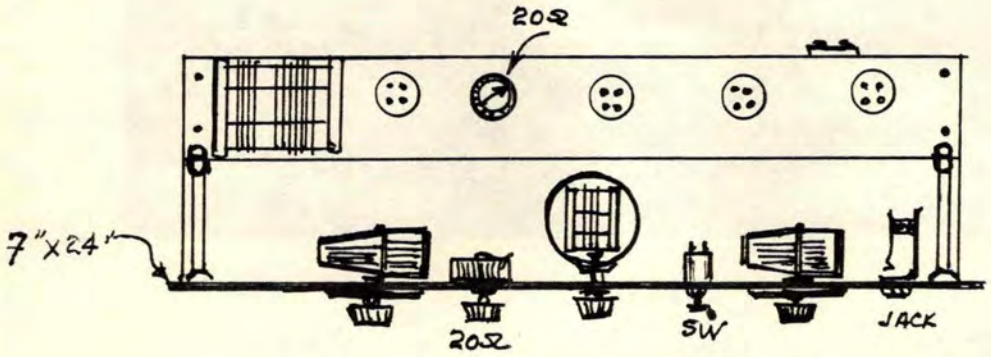

PLAN VIEW

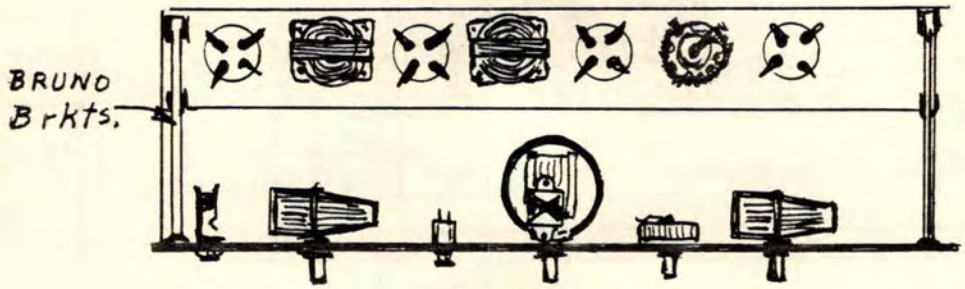

BOTTOM VIEW

COIL WINDING DATA

ANT PRI = #24 SCC, 10T.
ANT SEC = #24 SCC, 58 T.
Coil Form = 2½ ø".
Spacing between PRI and SEC 3/8".

3-Circuit Tuner = #24 SCC, 10T.
(Form 2½" ø) #24 SCC, 58 T.
Tickler = #26 SSC, 38T, wound on a 1" ø x 1" form.
Tickler rotates inside stator form.

"DIAMOND OF THE AIR" BATTERY MODEL, 1928;Sht.3

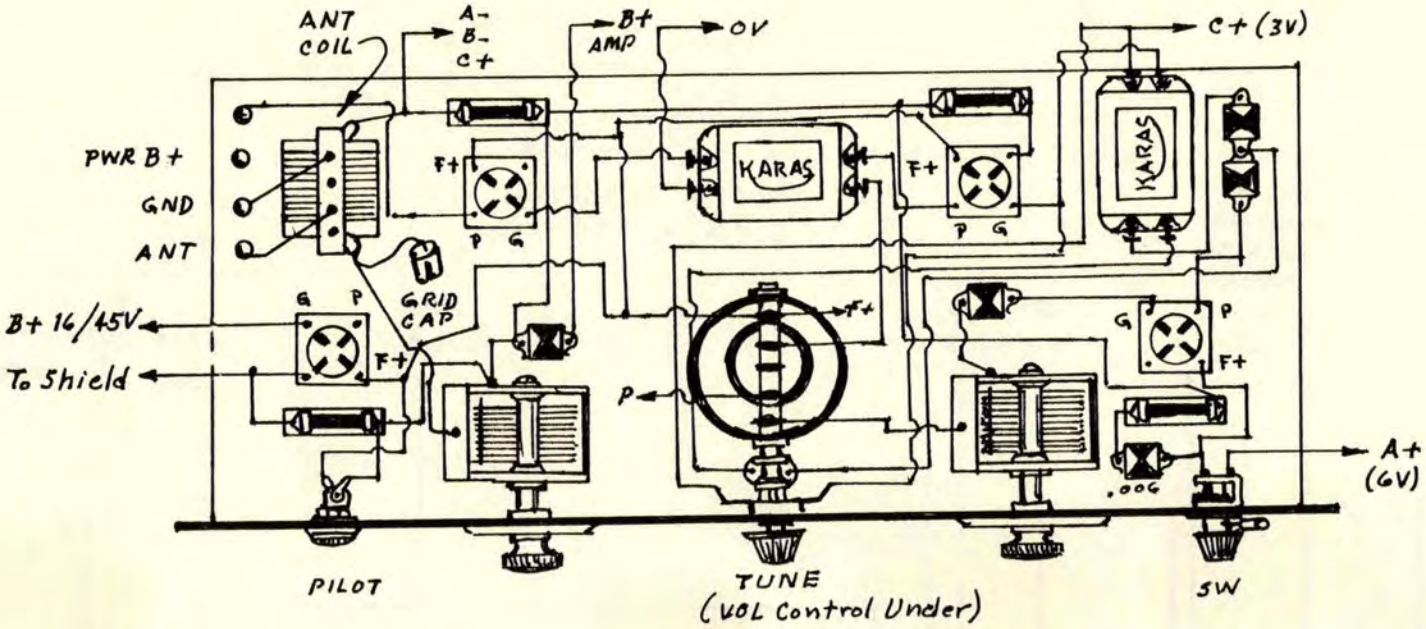

NOTES: Variables = 500 mmf; lead soldered to variables.
Grid-Leak = 5M-ohms + an Amperite.
Amperites Required = (3) 1-A; 622.
Lug on bottom of Variocoupler, 2nd from panel, n/c.
Most wiring under base, "golf-course" type.

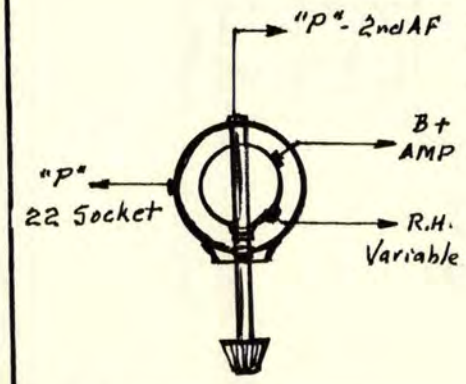

"DIAMOND OF THE AIR", AC MODEL;
(1928)

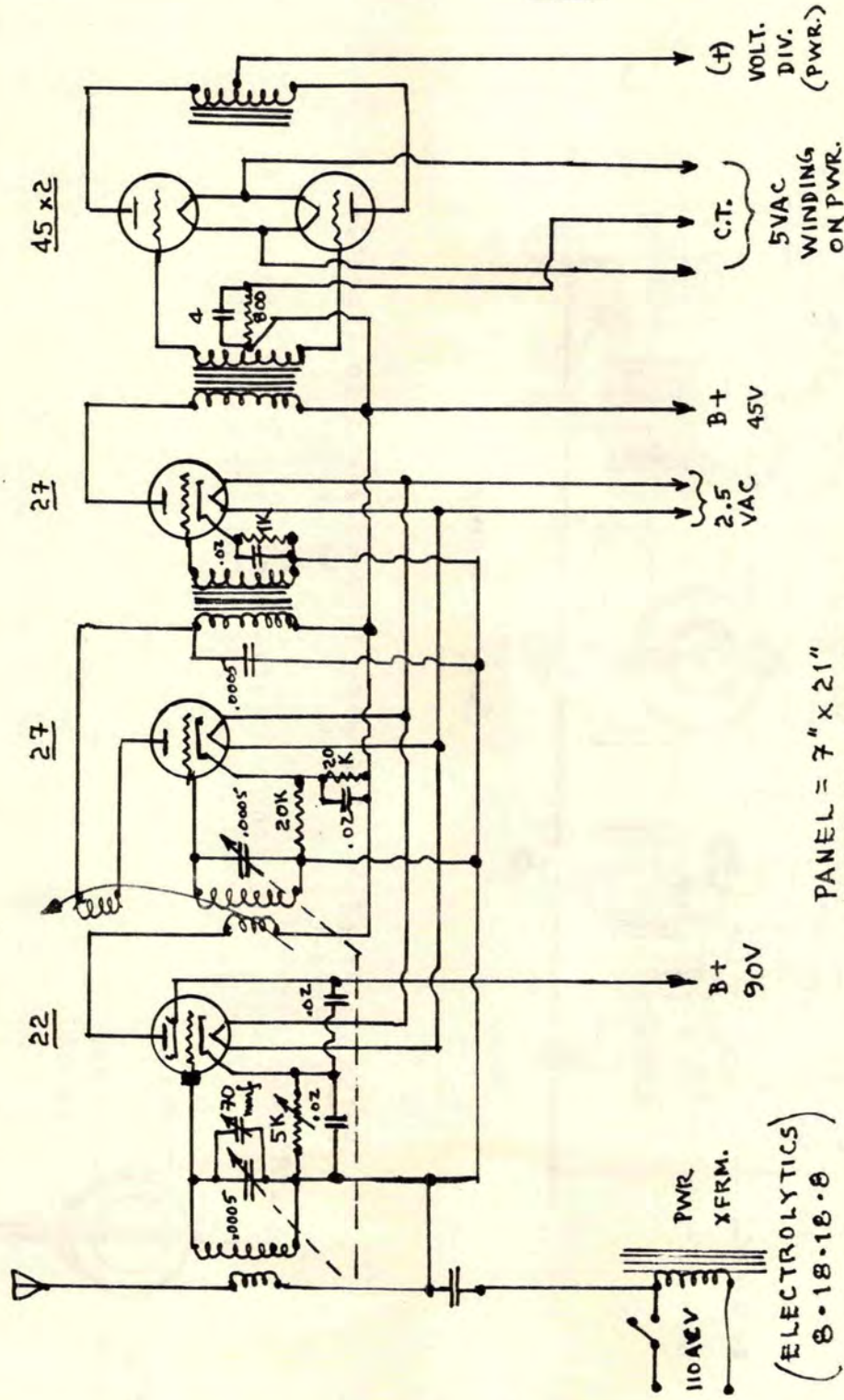

THE P-P DIAMOND, 1929; Sht. 1

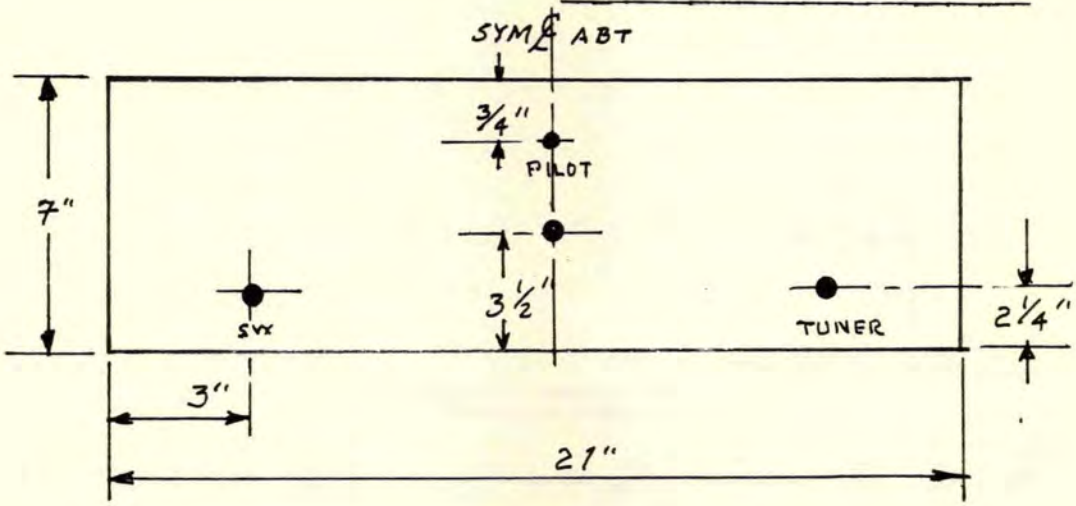

PANEL PATTERN

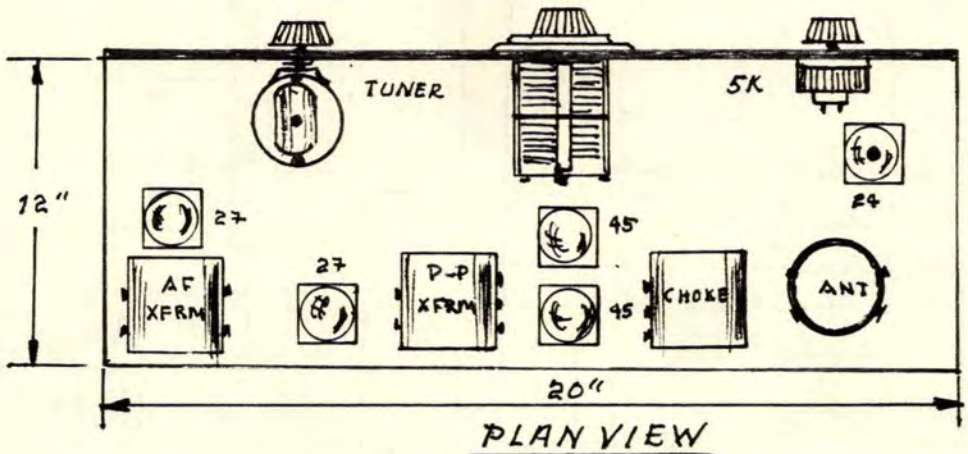

PLAN VIEW

3-CIRCUIT TUNER MOUNTED UPSIDE-DOWN.
METAL CHASSIS 10" X 20" .

ANT COIL.

PRI = NO. 24 DCC, T.
SEC = NO. 24 DCC, 48 T.
FORM - 3" X 2.5"

3-CIRCUIT TUNER.

PRI = 24 T, NO. 24 DCC
SEC = 48 T, NO. 24 DCC
FORM - 2.5" X 2.5"

TICKLER = 30 T, NO. 24 DCC, 1.75" ø ROTOR.

(RW 6-29)

THE P-P DIAMOND, 1929; Sht. 2

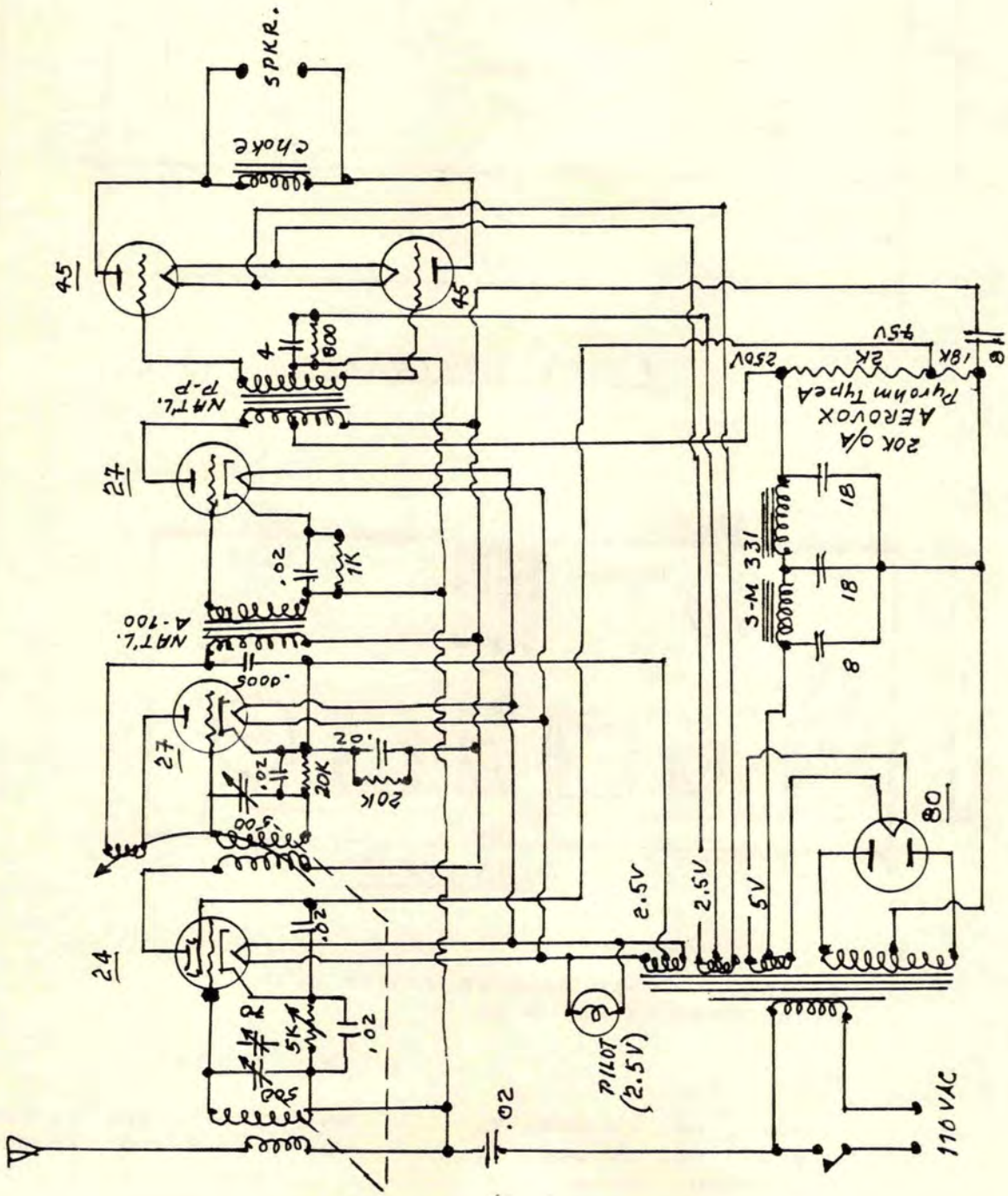

THE LAST AUTHORISED "DIAMOND OF THE AIR", 1929

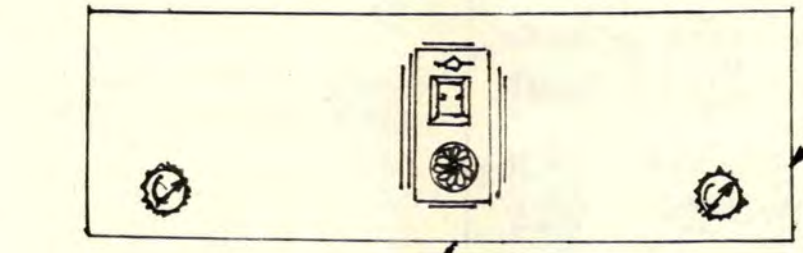

NAT'L. "H" COLOUR-WHEEL DIAL

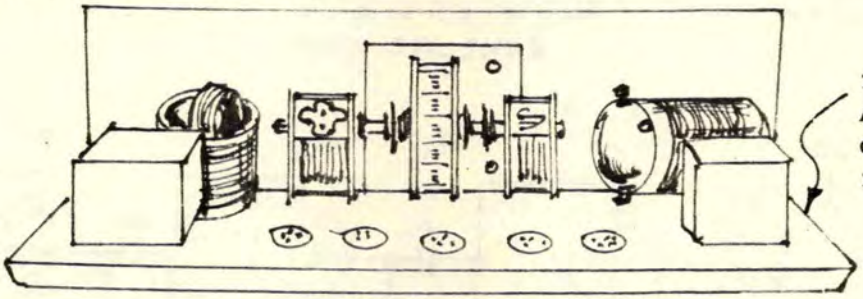

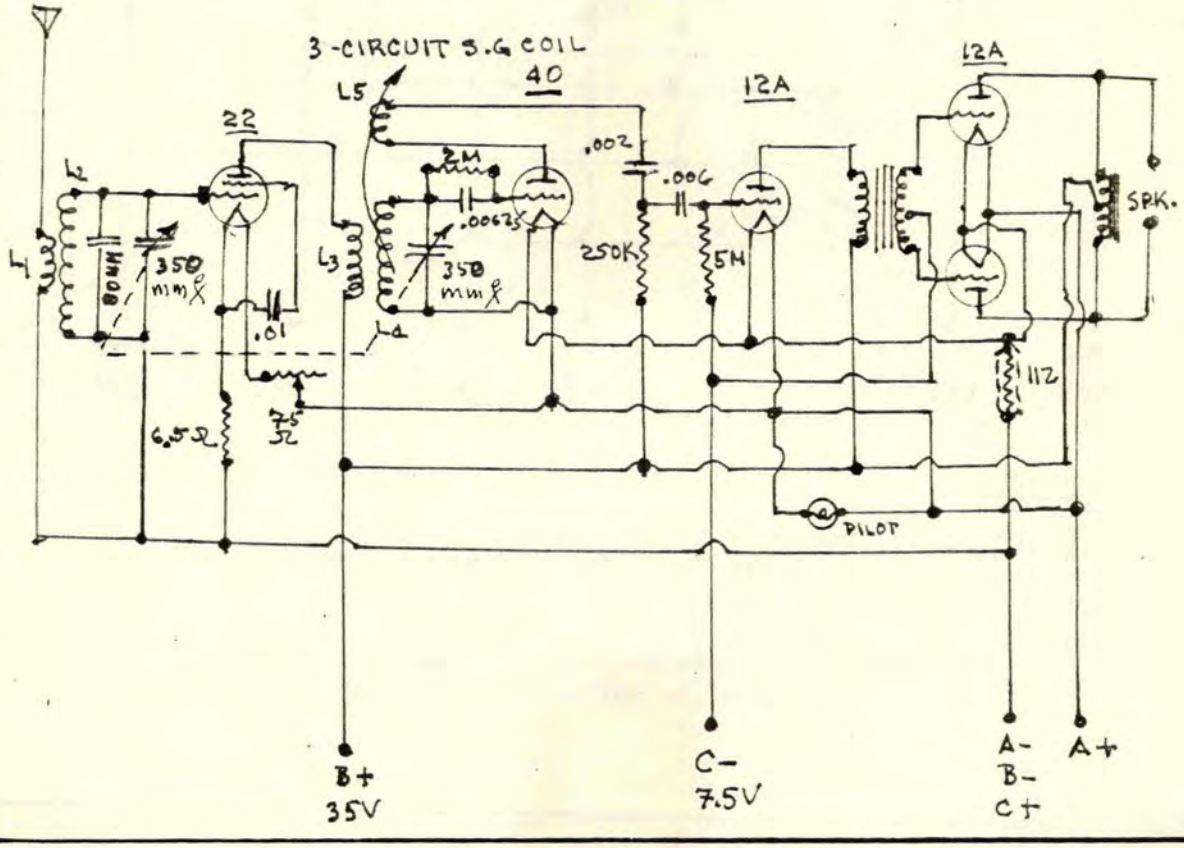

BERNARD "AUDIO-BASIN", 1927

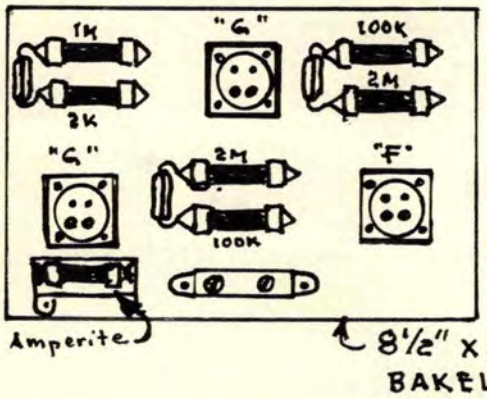

(See also LYNCH's Audio Deck for a remarkable similarity.)

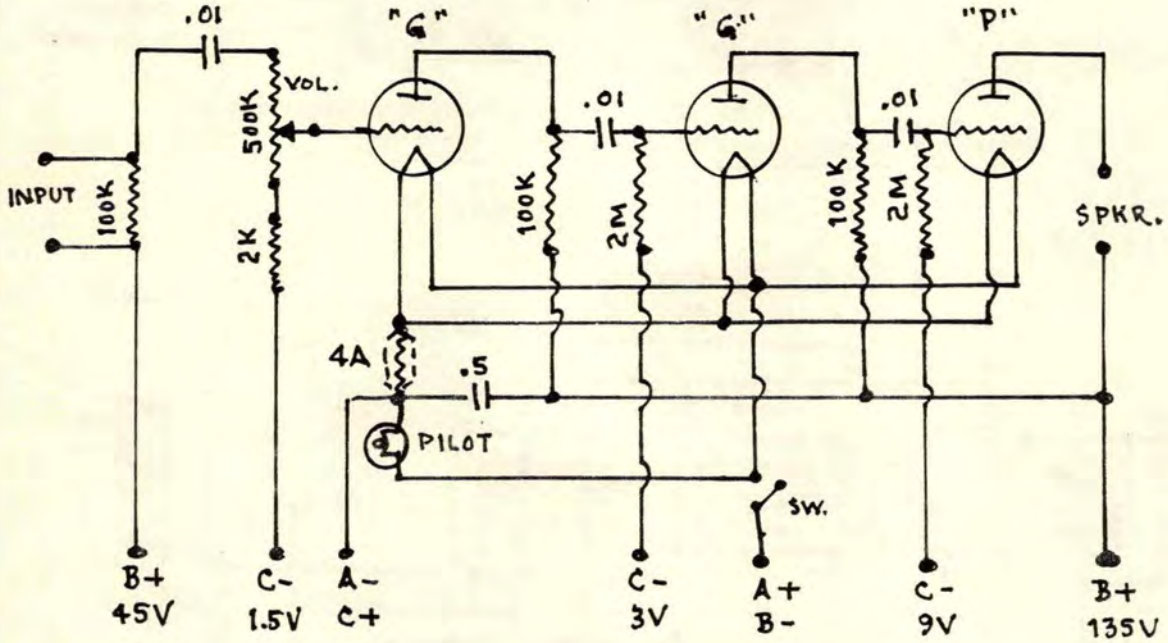

NOTES:

1. FIL switch was on VOL. control.
2. Originally used with Lata-Balsa wood speaker.
3. All tubes were Ce-Co.
4. FIL switch controls Amplifier only.
5. Cplng. condensers were soldered to lugs of resistors.
6. "P" tube could be a 10, with proper FIL and PLATE voltages.

(RW 10-8-27)

BERNSLEY PORTABLE, 1926

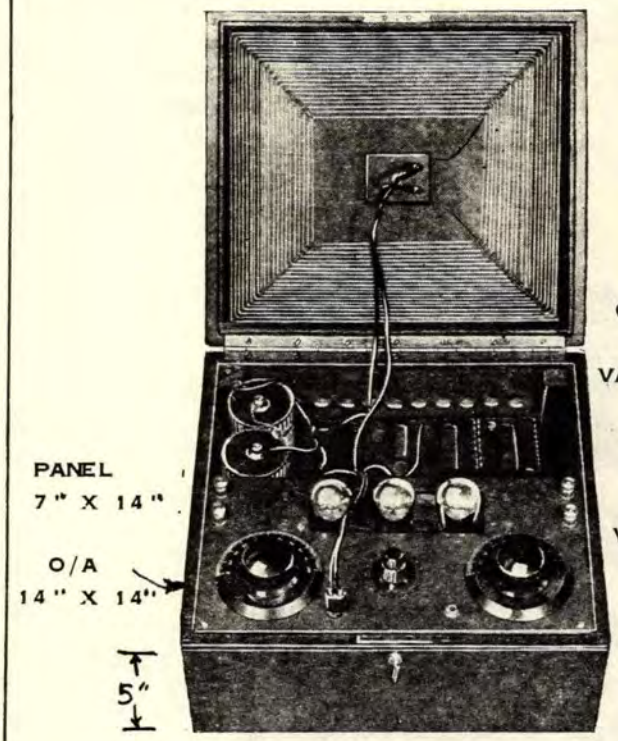

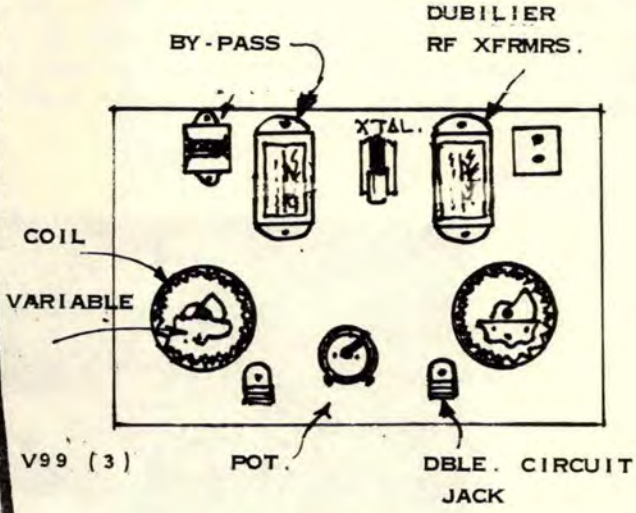

BACK OF PANEL

Carborundum Fixed Crystal.
Loop = 21T of loop wire.
44T #22 DSC SEC, both coils.
10T #22 DSC PRI, ANT coil.
15T #22 DSC PRI, RF coil.

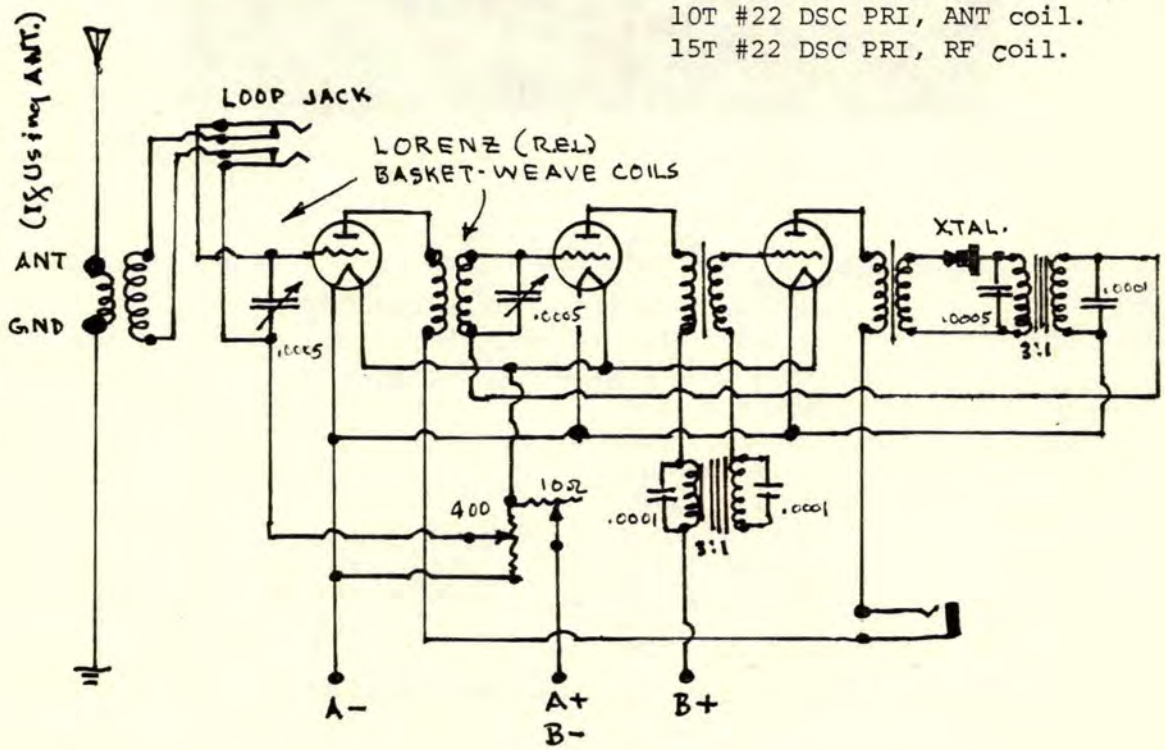

(RN 8-26)

BEST TUNED RF AMPLIFIER, 1926; Sht. 1

This was an original design by Best, and reflected an acute awareness of the problems abroad in the land. It was also the first judicious use of shielding. The unit can be used in several applications, as are depicted over-leaf. I've built the unit, and it works..

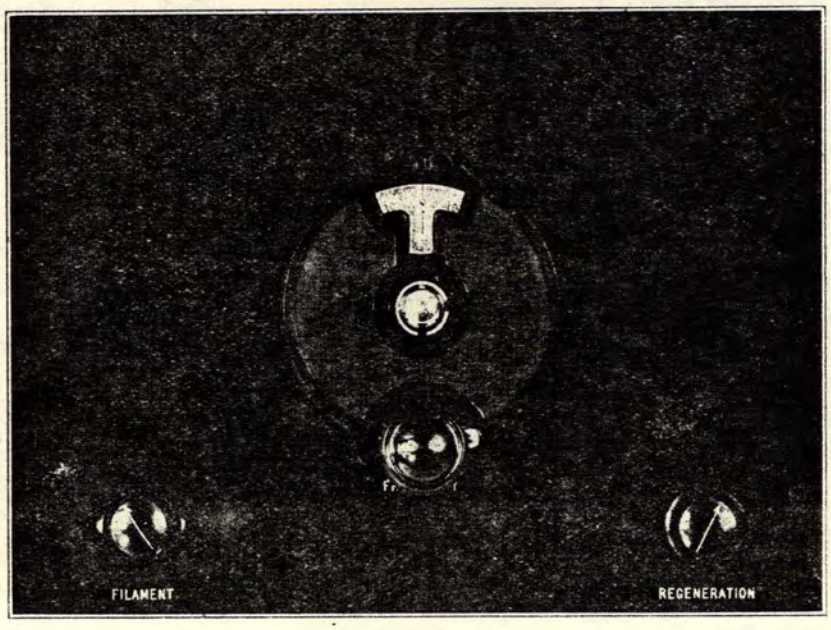

MAJOR PARTS LIST

(2) S-M Type 110-A Coils w/ Sockets.
Cardwell 350 mmf Variable.
S-M 250 Variable.
Amperite (1-A).
(2) RFC, 60-85 mH.
1 MFD By-Pass.
Vernier Dial.
Panel = 8½" x 12", Bakelite.
Sub-Panel = 6" x 7", Bakelite.
Two Pieces of Brass Sheeting: 8½" x 12" x 1/16";
4"x 6" x 1/16".

Comparable parts may be substituted.

BEST TUNED RF AMPLIFIER, 1926; Sht. 3

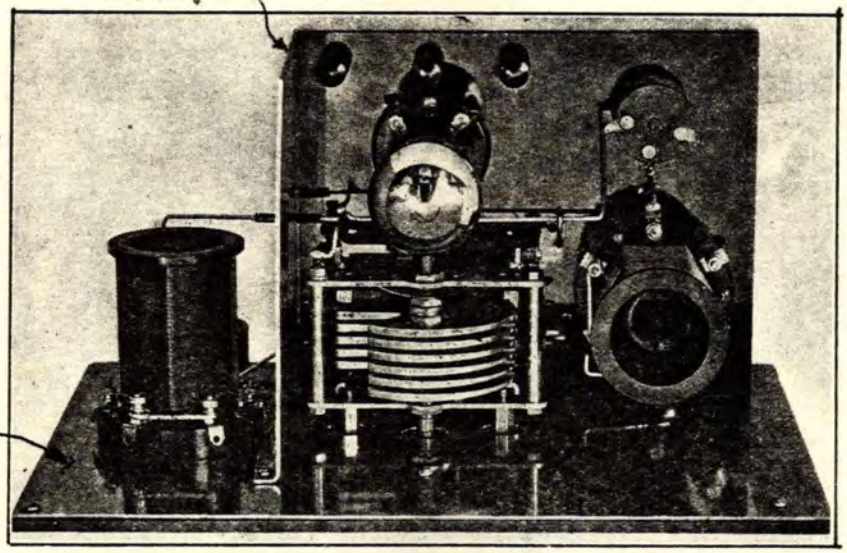

PLAN VIEW

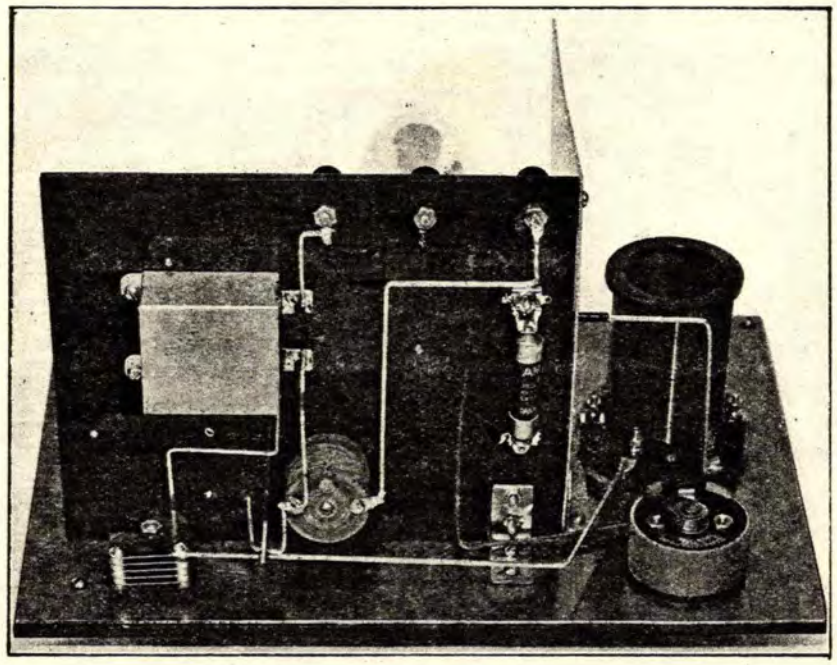

BOTTOM VIEW

BEST TUNED RF AMPLIFIER, 1926; Sht. 2

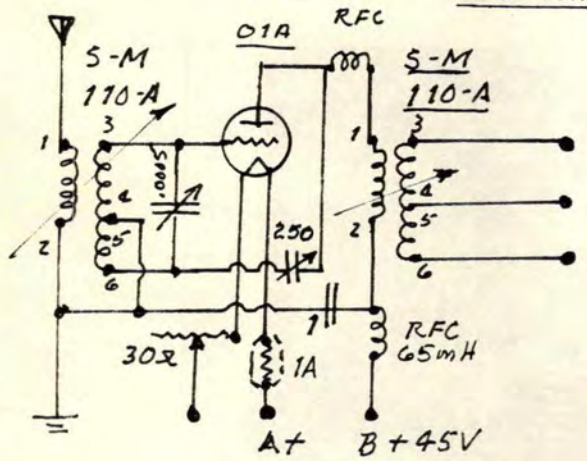

TO LOOP TERMINALS

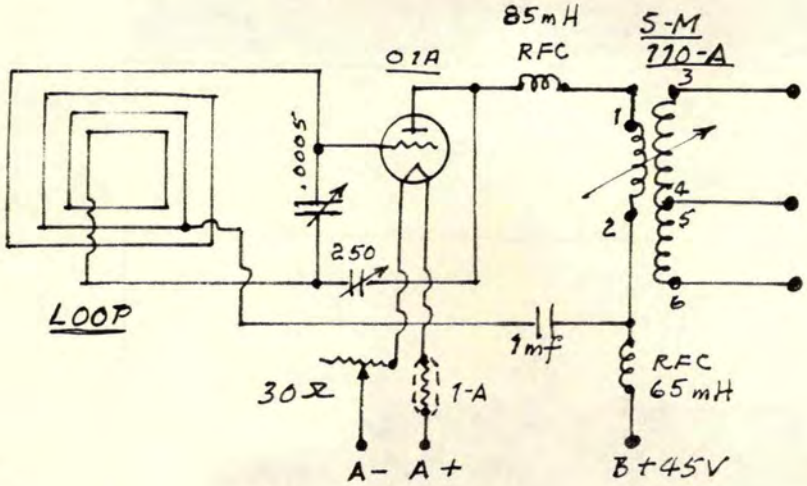

TERMINALS TO LOOP

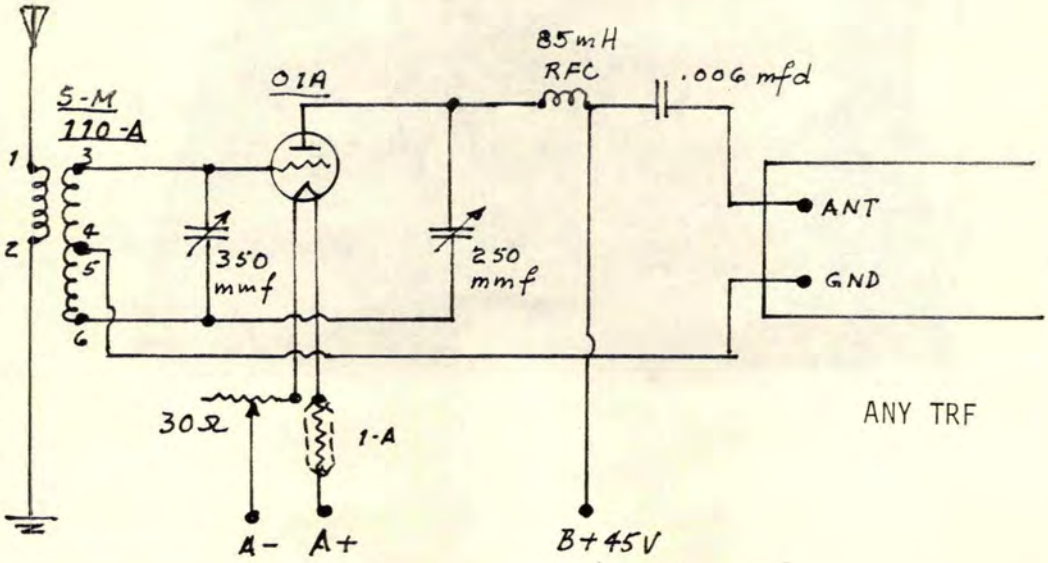

ANY TRF

BESTONE V-60 TRF, 1924 (Henry Hyman Co., NYC.)

NOTES:

1. Two 4"Ø dials required.
2. Six binding posts required.
3. All variables were 15 plates, 350 mmf each.
4. Batteries were in the bottom of the cabinet.

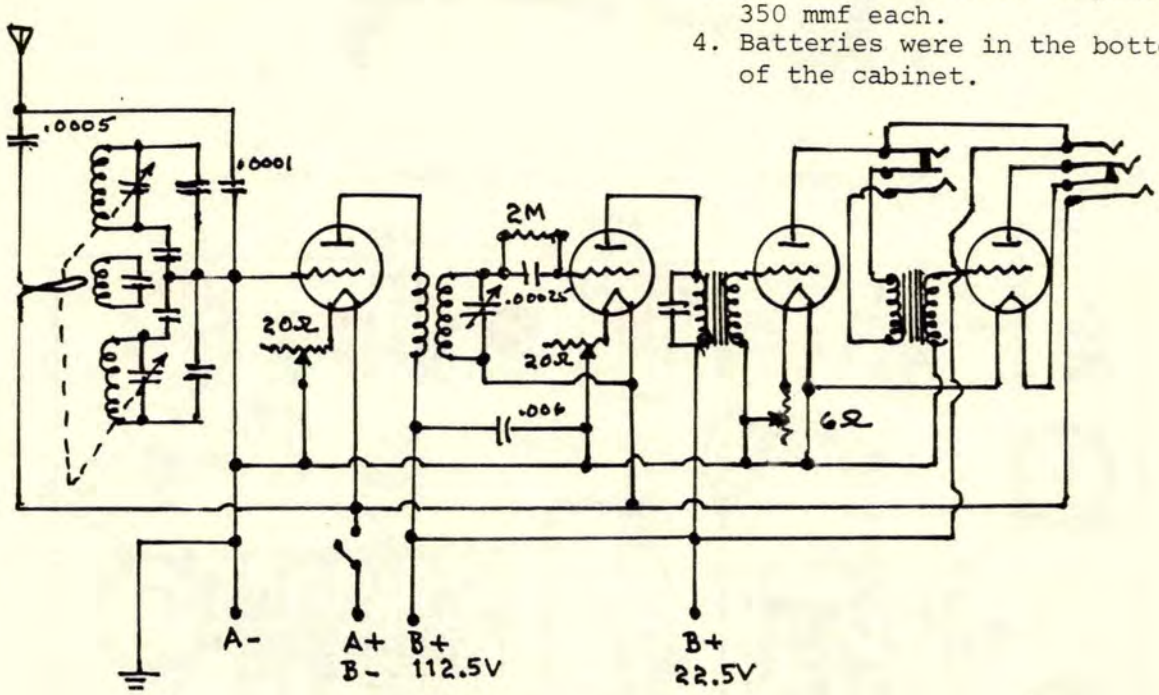

(RW 4.12.24)

BIRNBACH AC-FOUR, 1928; Sht. 1

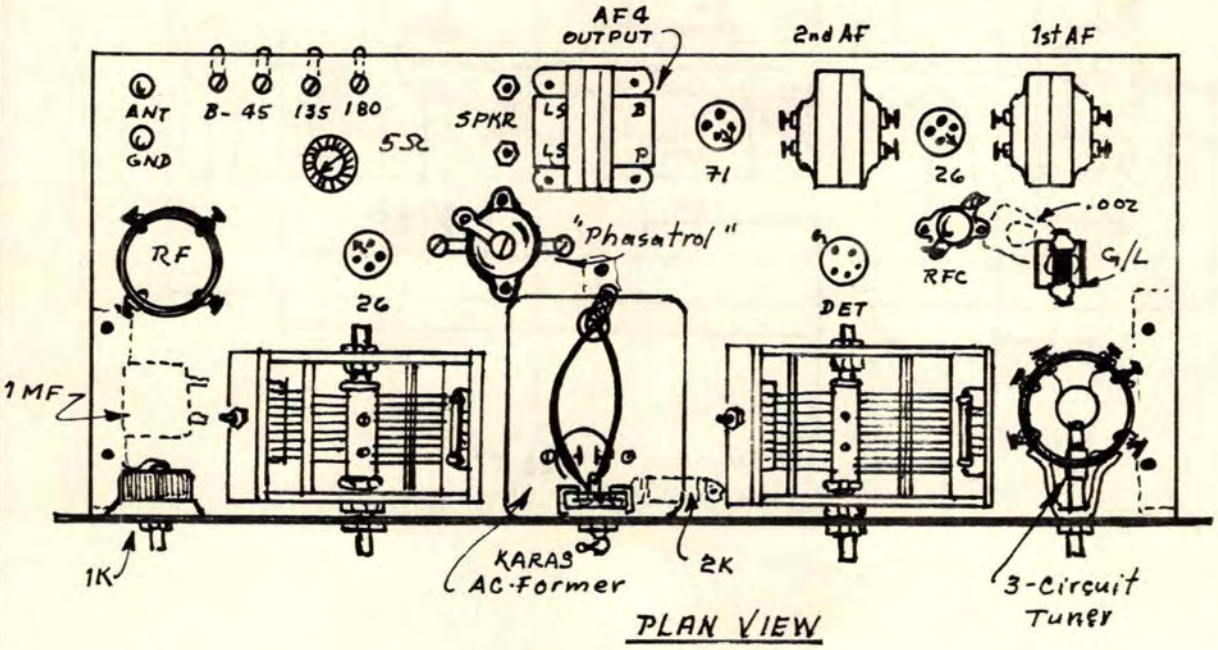

PLAN VIEW

(CB 5-28)

BIRNBACH AC-FOUR, 1928; Sht. 2

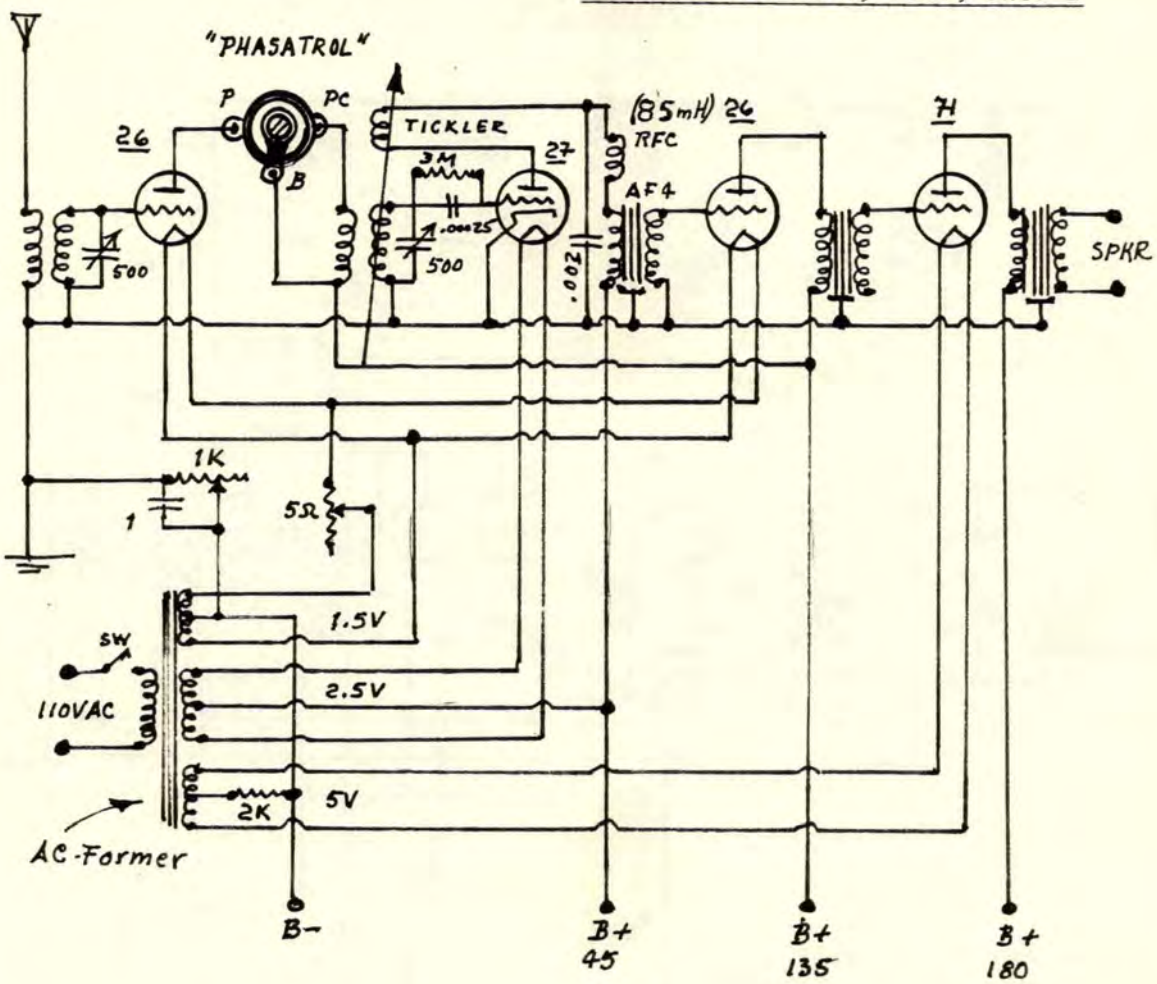

A Simple & Efficient Receiver, Easy To Construct.

(2) KARAS #23 Variables
#12 KARAS AC-Former.
BIRNBACH 3-Circuit Tuner.
BIRNBACH #60 RFC.
(2) FERRANTI AF4 AF Xfrmrs.
FERRANTI AF Output Xfrmr.
HAMMARLUND 85mH RFC.
ELECTRAD "Phasatrol".
NATIONAL "B" Vernier Dials.

Panel = 7" x 24" Formica.
Sub-Panel = 10" x 22" Formica.

BIRNBACH was a small but reputable NYC company. They manufactured components and accessories, such as coils, 2-circuit tuners, 3-circuit tuners, battery cables, cords for speakers and batteries, etc. Their products were of high quality and frequently turn up at swap-meets: grab them and start constructing!

BODINE "TWIN-EIGHT" TRF, 1926

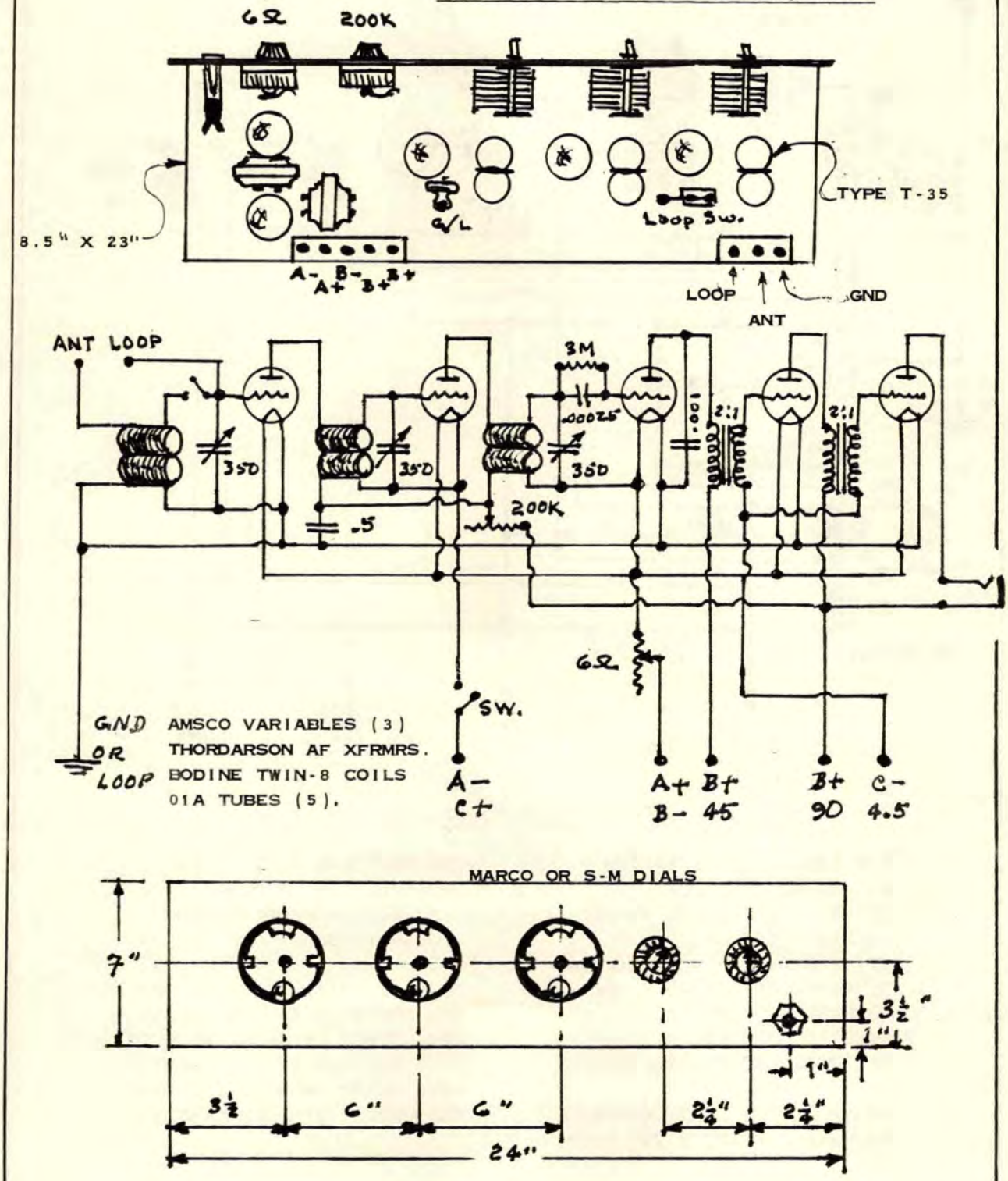

(CB 6-26)

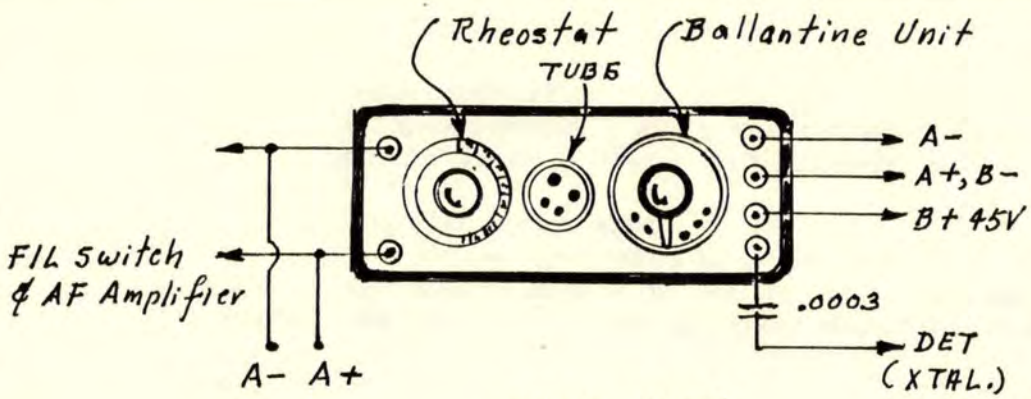

PLAN VIEW

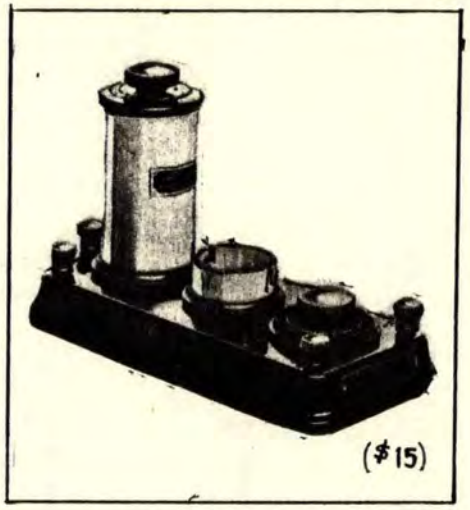

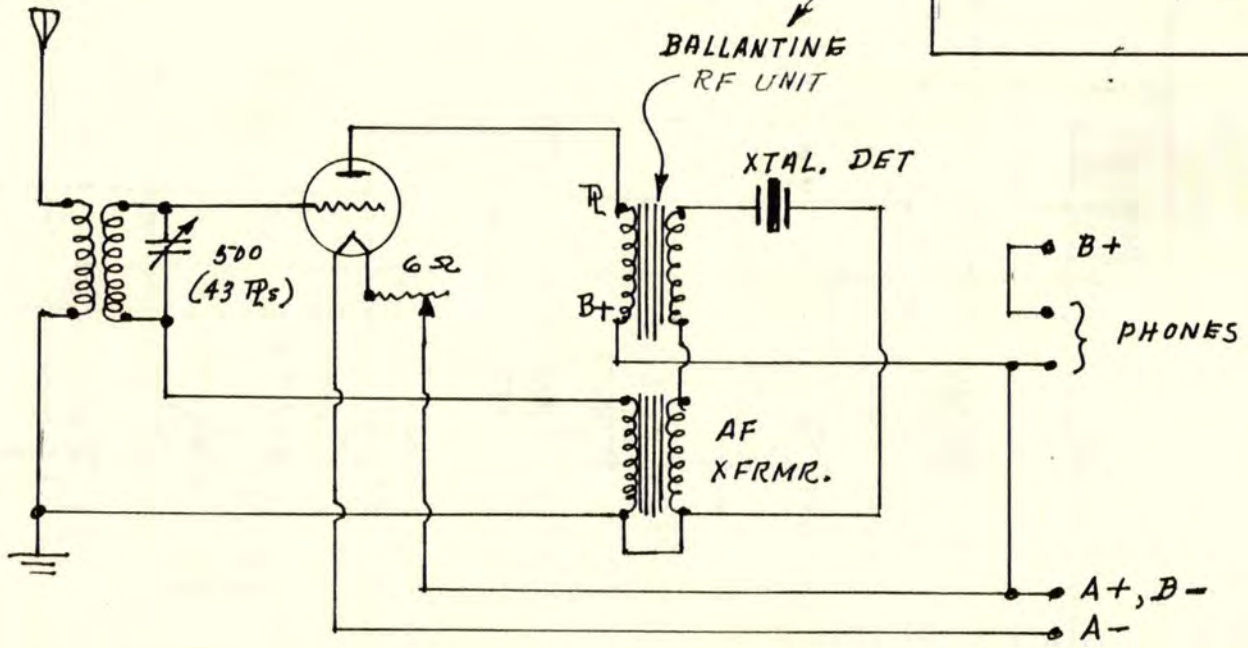

If unstable, reverse P & B+.

MODEL 5 (55-175 Meters)

BOONTON RF AMPLIFIER & RCVR., 1925

BOONTON "LIGHT FOUR" PORTABLE, 1924

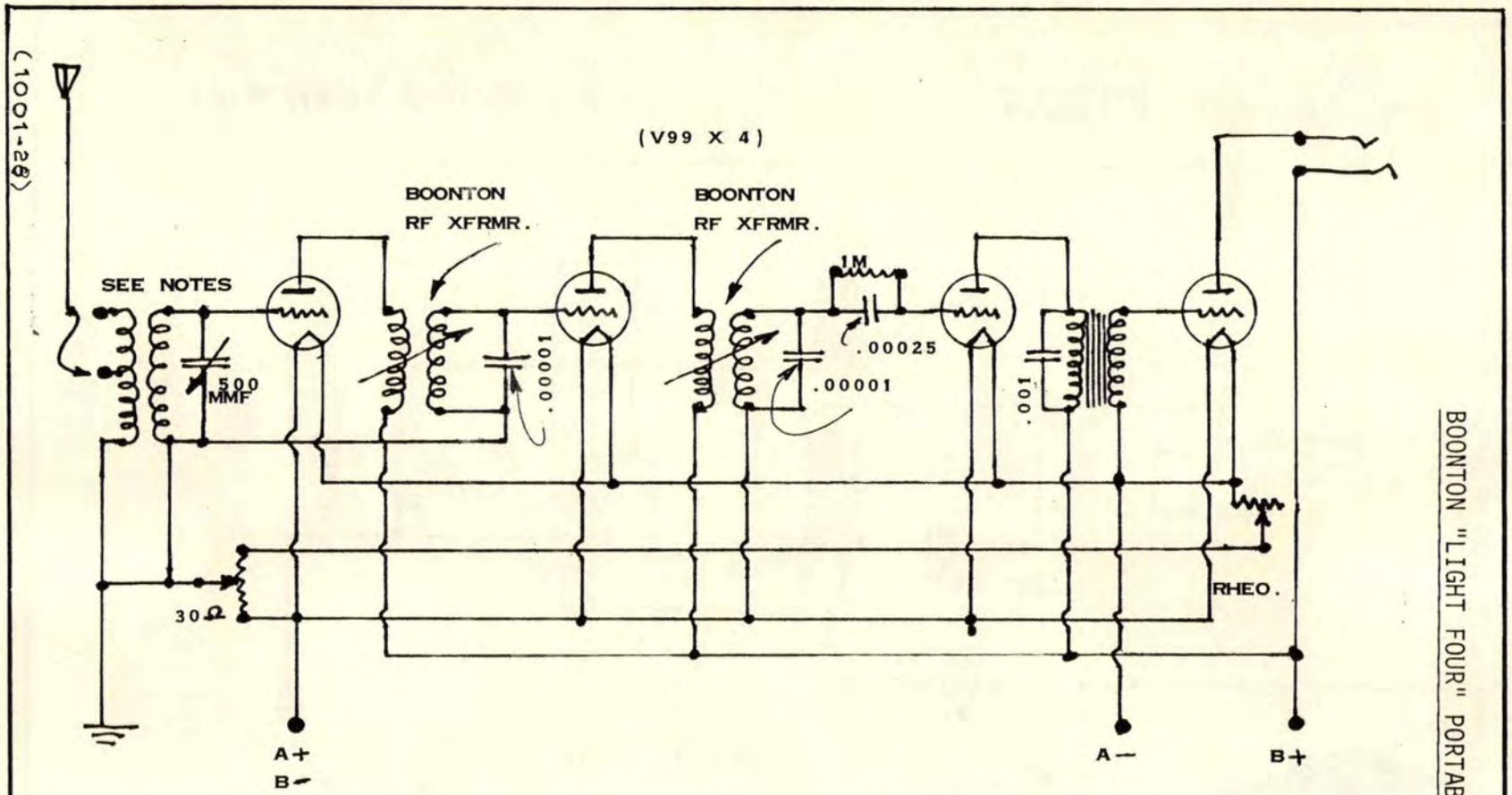

NOTES: THE ANT COIL IS ANY STANDARD ANT COIL, OR YOU CAN EASILY WIND YOUR OWN, USING A 3"Ø FORM, WITH 10T ON THE PRI, AND 50T ON THE SEC, BOTH WOUND WITH NO. 24DCC WIRE.

DO NOT ATTEMPT THIS CIRCUIT WITHOUT THE BOONTON RF TRANSFORMERS - WHICH ARE THE WHOLE POINT OF THIS CIRCUIT.

BOSCH "AMBOROLA", MODEL 16, 1926; Sht. 1

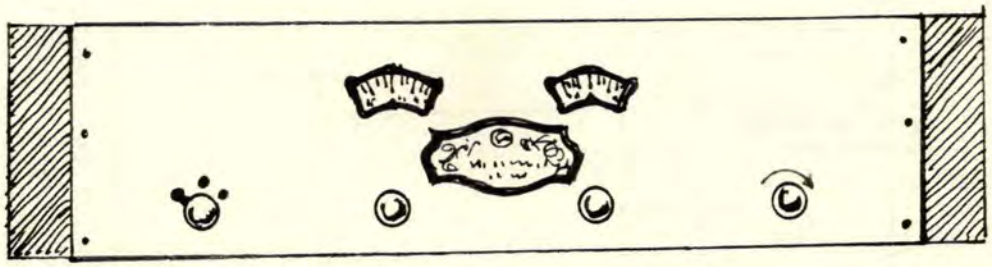

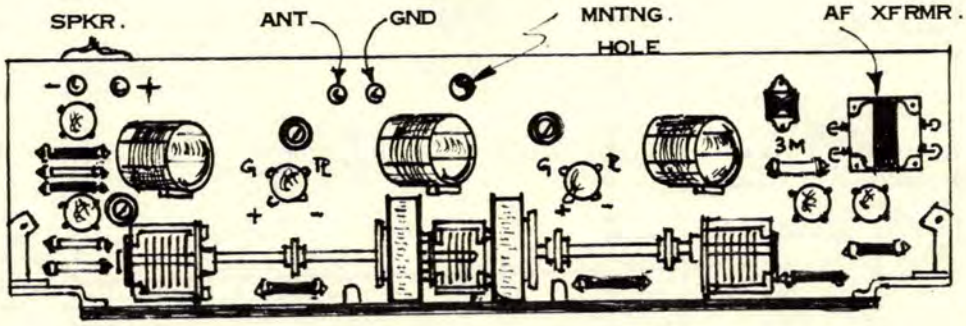

= TRIMMERS = AMPERITE = RESISTORS

NOTE: FIL POLARITY IS REVERSED RIGHT & LEFT OF CENTRE-LINE.

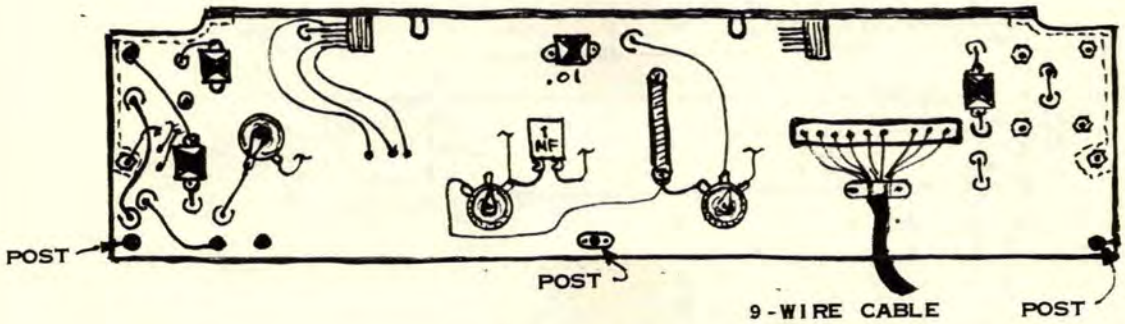

PARTIAL BOTTOM VIEW

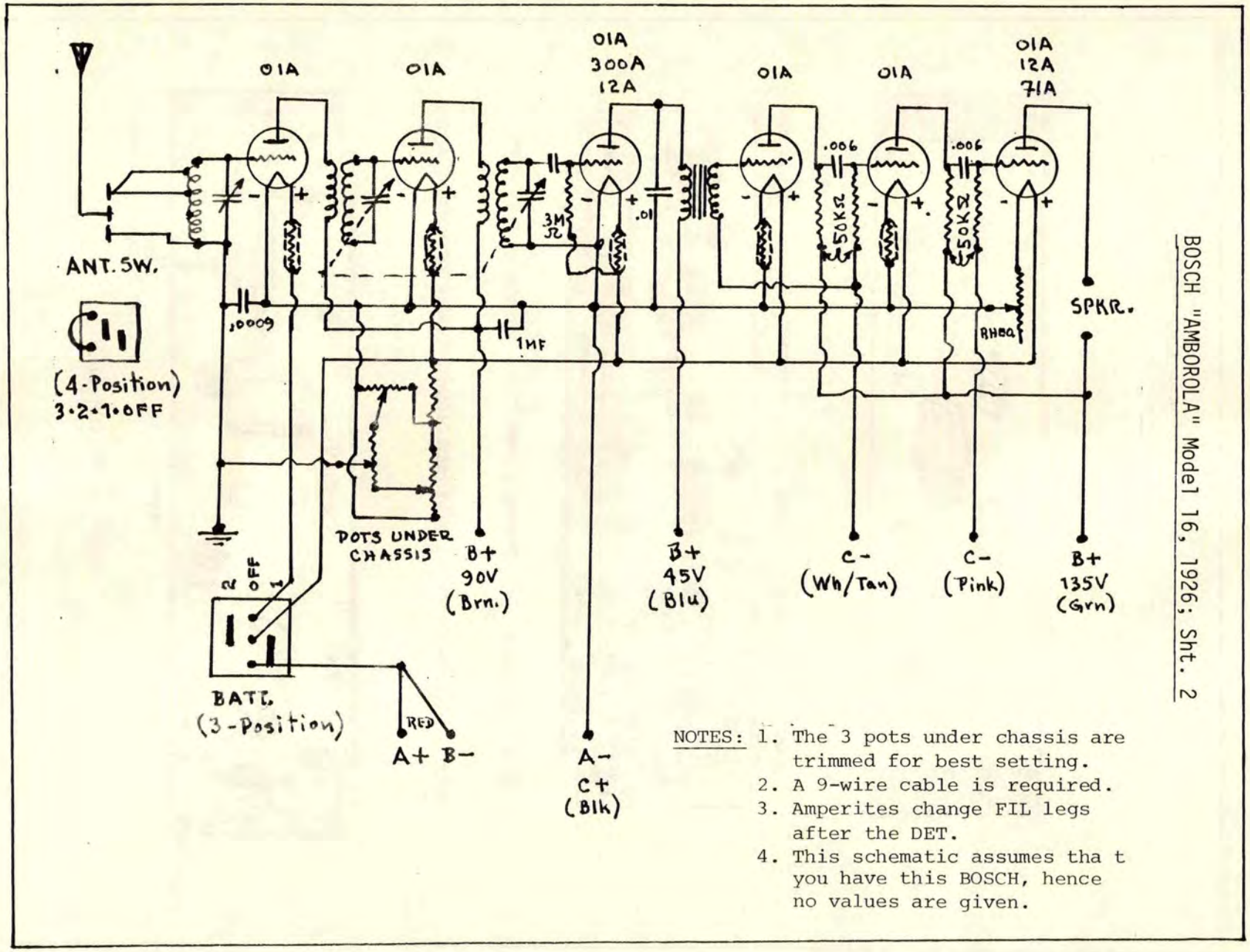

BOSCH "AMBOROLA" Model 16, 1926; Sht. 2

NOTES:
1. The 3 pots under chassis are trimmed for best setting.
2. A 9-wire cable is required.
3. Amperites change FIL legs after the DET.
4. This schematic assumes tha t you have this BOSCH, hence no values are given.

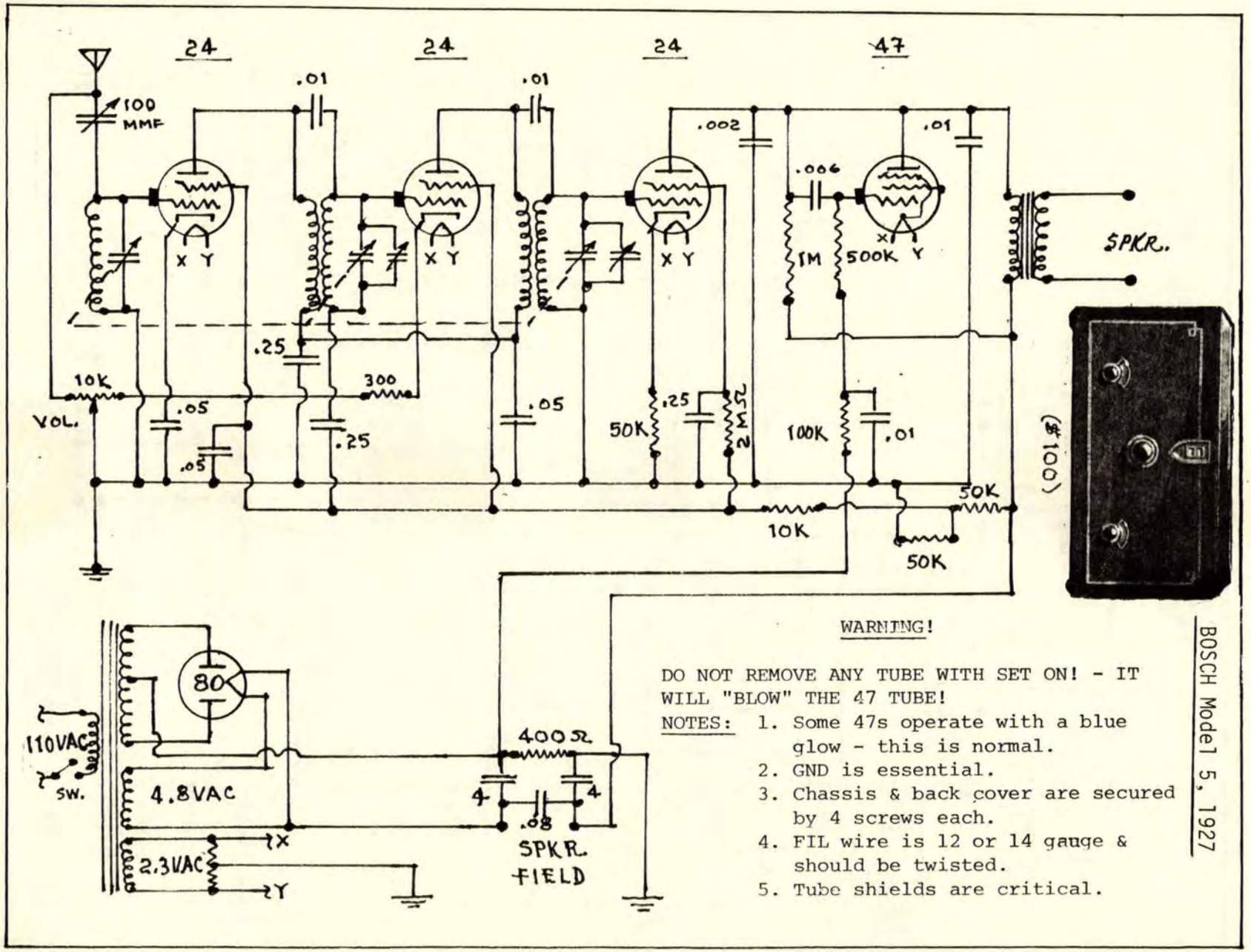

WARNING!

DO NOT REMOVE ANY TUBE WITH SET ON! - IT WILL "BLOW" THE 47 TUBE!

NOTES:
1. Some 47s operate with a blue glow - this is normal.
2. GND is essential.
3. Chassis & back cover are secured by 4 screws each.
4. FIL wire is 12 or 14 gauge & should be twisted.
5. Tube shields are critical.

BOSCH Model 5, 1927

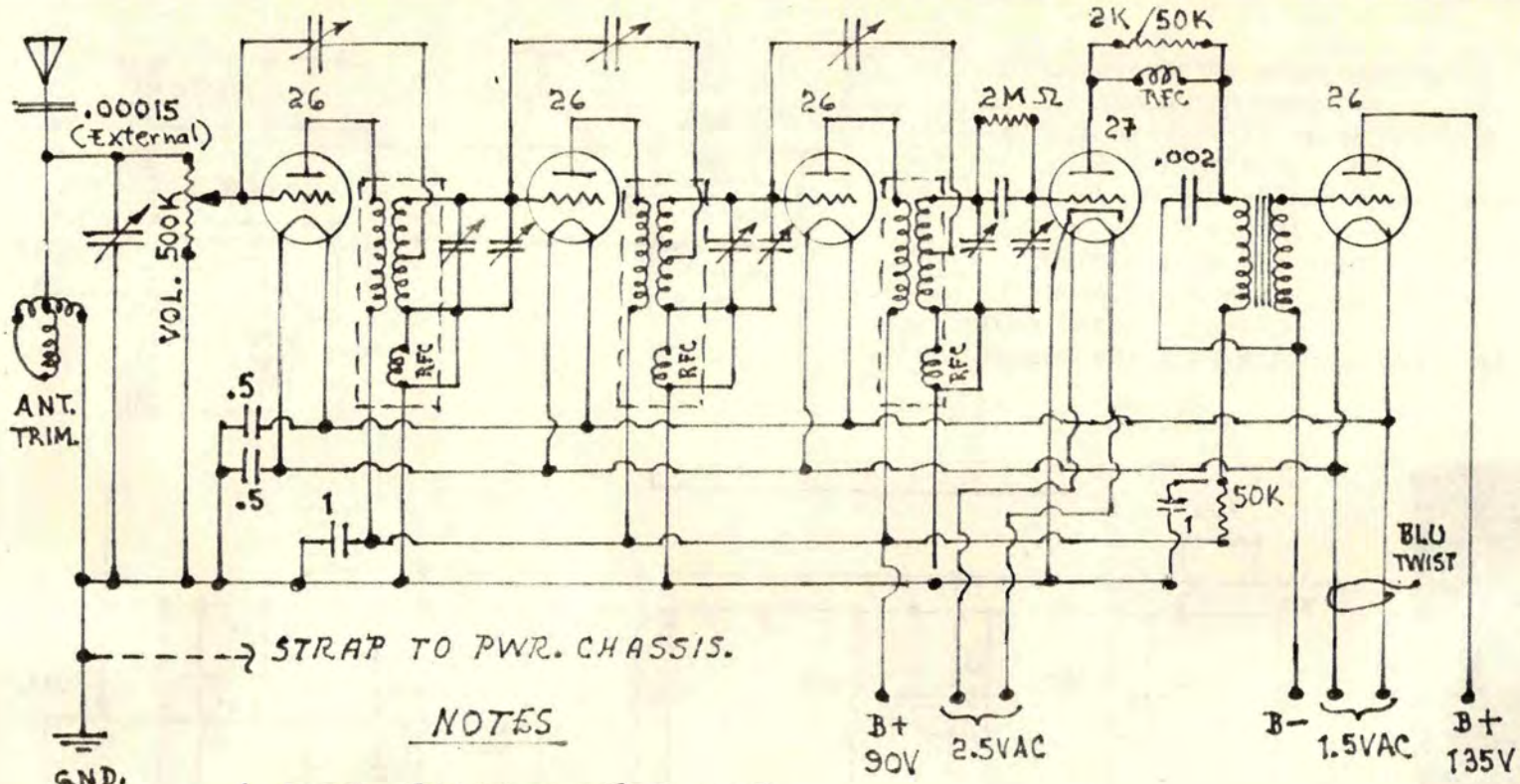

BOSCH Model 28 & 29, 1929; Sht. 1

NOTES

1. SPKR. JACKS ON PWR. UNIT.
2. SEE VOL. IV FOR PWR. UNIT SCHEMATIC.
3. SEE SHT. 2 FOR ALIGNMENT PROCEDURES.
4. FIRST 3 RFCs SHOWN ARE IN RF COIL SHIELDS; RFC FROM 27 ℞ IS SEPERATE.

(CB 11-29) 5. GANGED VARIABLES (4).

BOSCH MODELS 28 & 29, 1929: Sht. 2

BALANCING THE RF STAGES:

A modulated RF oscillator or strong signal may be used.

1. Set Station Selector dial at approximately 40°.
2. Pick up a signal and tune for maximum volume.
3. Set ANY variometer and VOL full on.
4. Remove 1st RF tube and replace with a good 26 from which one FIL pring has been removed . Do NOT use a burned-out tube.
5. If signal is heard, adjust the nut of the 1st RF balancing condenser, using an insulated tool, until no signal is heard.
6. Leave nut at position of minimum volume.
7. Balance 2nd and 3rd RF stages the same way.

ALIGNMENT AFTER BALANCING:

Set can only be aligned after balancing. Adjust nut of 2nd and 3rd RF alignment condenser and the DET alignment condenser for maximum volume.The special balancing tube mentioned above must NOT be used.

DET.
(Alignment Only.)

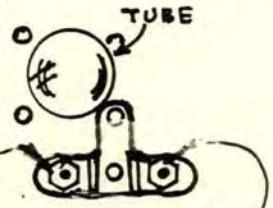

RF STAGES

Balancing Condenser Nut

RF Alignment Nut

TROUBLE-SHOOTING

Trouble:	Probable Cause:
Weak Reception; Distortion.	Open circuited 50K DET plat resistor; replace.
Hum @ Resonance.	Out of balance; open supply line by-pass.
Noisy Reception.	Noisy 50K plat resistor; noisy PRI winding of AF xfrmrs.; noisy VOL control.
Very Loud Hum.	Shorted RF bias resistor; may be shorted in one of the two condensers in series with grounded centre-tap.

BOSCH MODELS 28 & 29, 1929; Sht. 3

TROUBLE-SHOOTING (Continued)

Intermittent Fading.	Loose lug on 1st sexion of stator condenser; black lead from ANT Variometer stator shoring to chassis at feed-through hole.
Replacing VOL Control.	Centralab #3-72-102 of 25K ohms. Install at point of control, instead of original point. Ground metal cover on rear of new control to prevent oscillation.

NOTE:

This installation does away with the control cable and pully.

* * *

BREMER-TULLY "NAMELESS" TRF, 1924: (B-T RF-5)

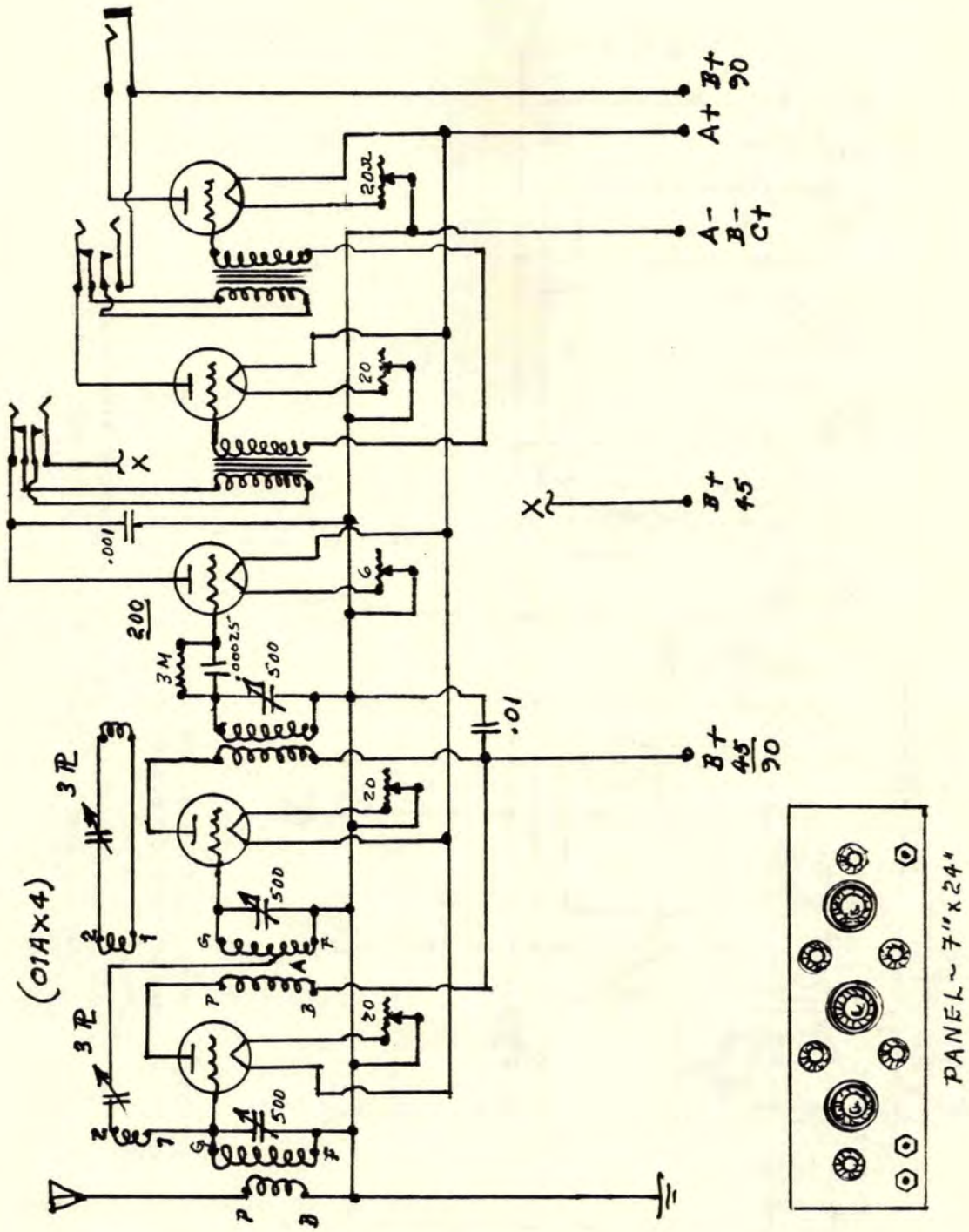

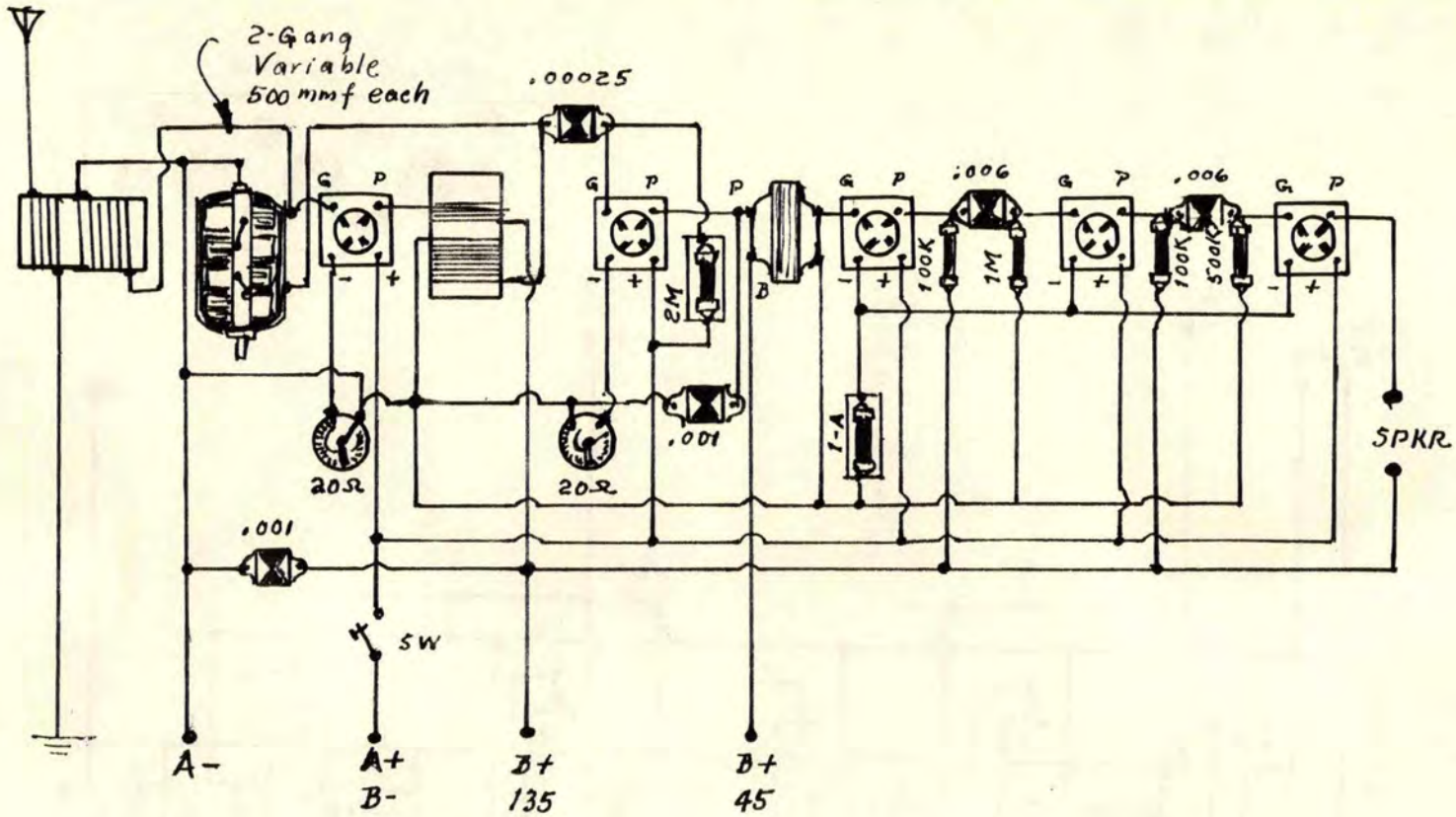

NOTES: POSITIVE BIAS ON DET TUBE.
BRUNO "MAGIC" DIALS, 4" Φ.
PANEL 7" X 18".
SEE DX-SUPERDYNE AND THE 1926 POWERTONE AND DIAMOND OF THE AIR FOR COIL DATA -THEY ALL USED THE SAME COILS.

(RW 12-12-25)

THE BRUNO "POWERTONE", 1925

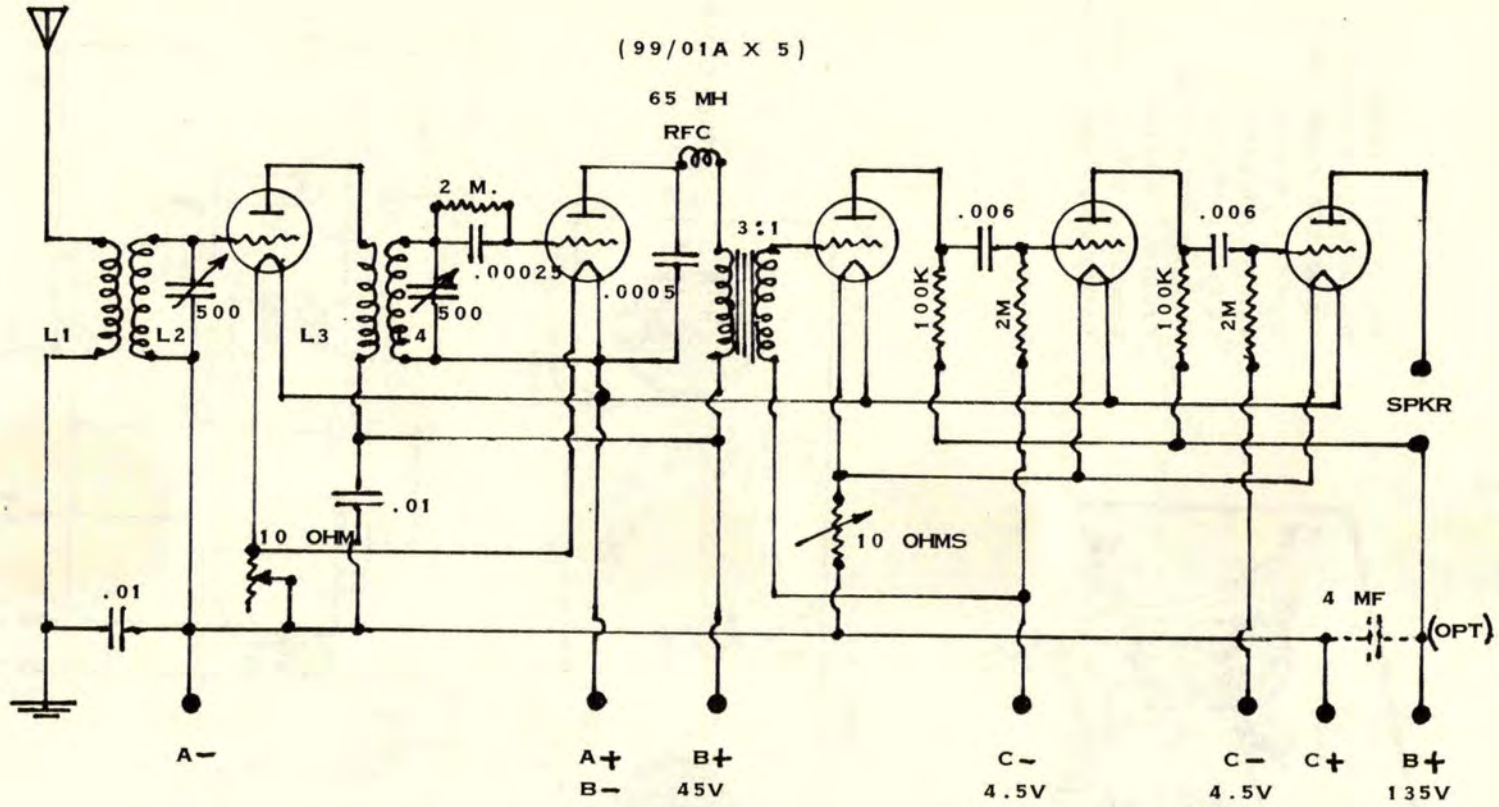

NOTES: BRUNO 99 COIL SET USED ORIGINALLY.
COIL FORMS 2.5" Ø X 2".
L1 = 10T NO.24 DCC. L2 = 52T NO. 24 DCC. L3, L4 = SAME AS L1 & L2.
SEPERATION BETWEEN L1 & L2 = .375".
SEPERATION BETWEEN L3 & L4 = .250".

BRUNO "POWERTONE" TRF, 1926 VERSION

BRUNO "77" WONDER SET, 1925; $23

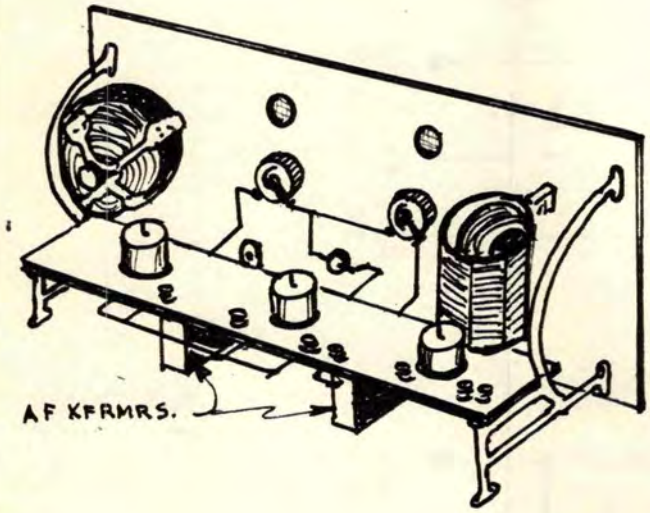

BRUNO '77' TUNER.
BRUNO NO. 18 VARIO-DENSER.
BRUNO SUB-PANEL BRKTS.
BRUNO 4' Ø DIALS.
20-OHM RHEOSTAT.
10-OHM RHEOSTAT.
2M-OHMS GRID-LEAK.
FILAMENT SWITCH.
SINGLE & DOUBLE JACKS.
FIXED CONDENSERS AS SHOWN.

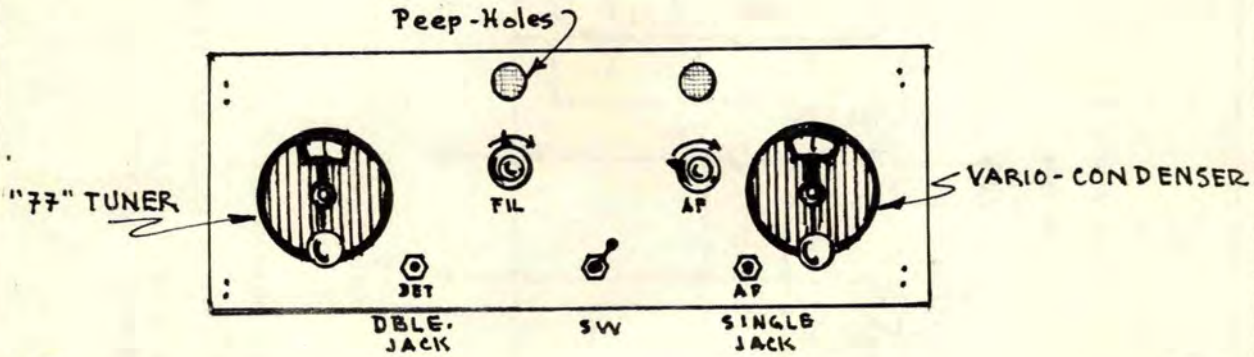

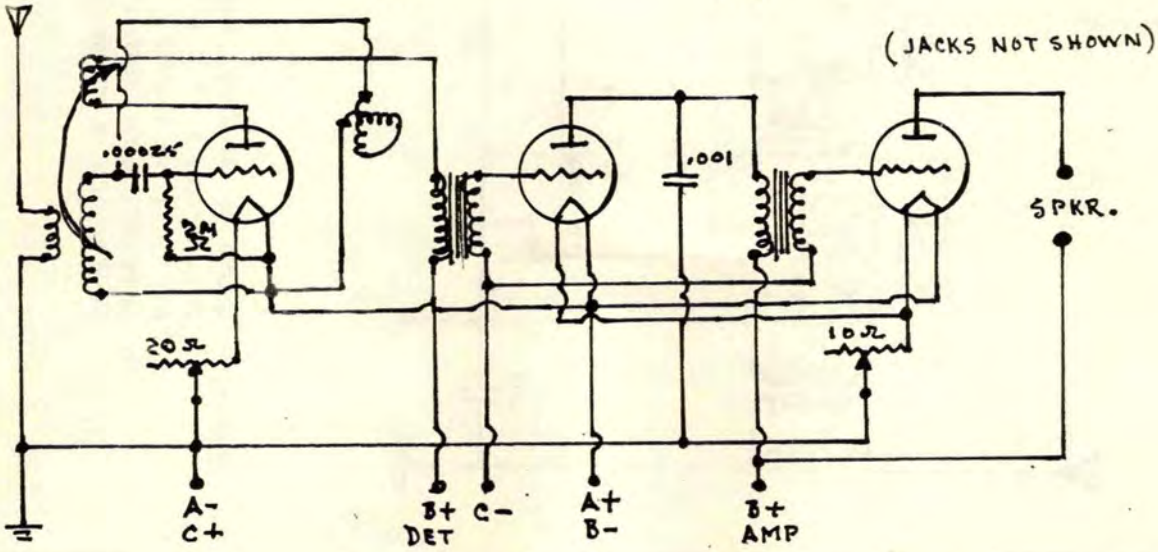

BRUNOTROL/SIMPLETROL 5-TUBE TRF, 1927

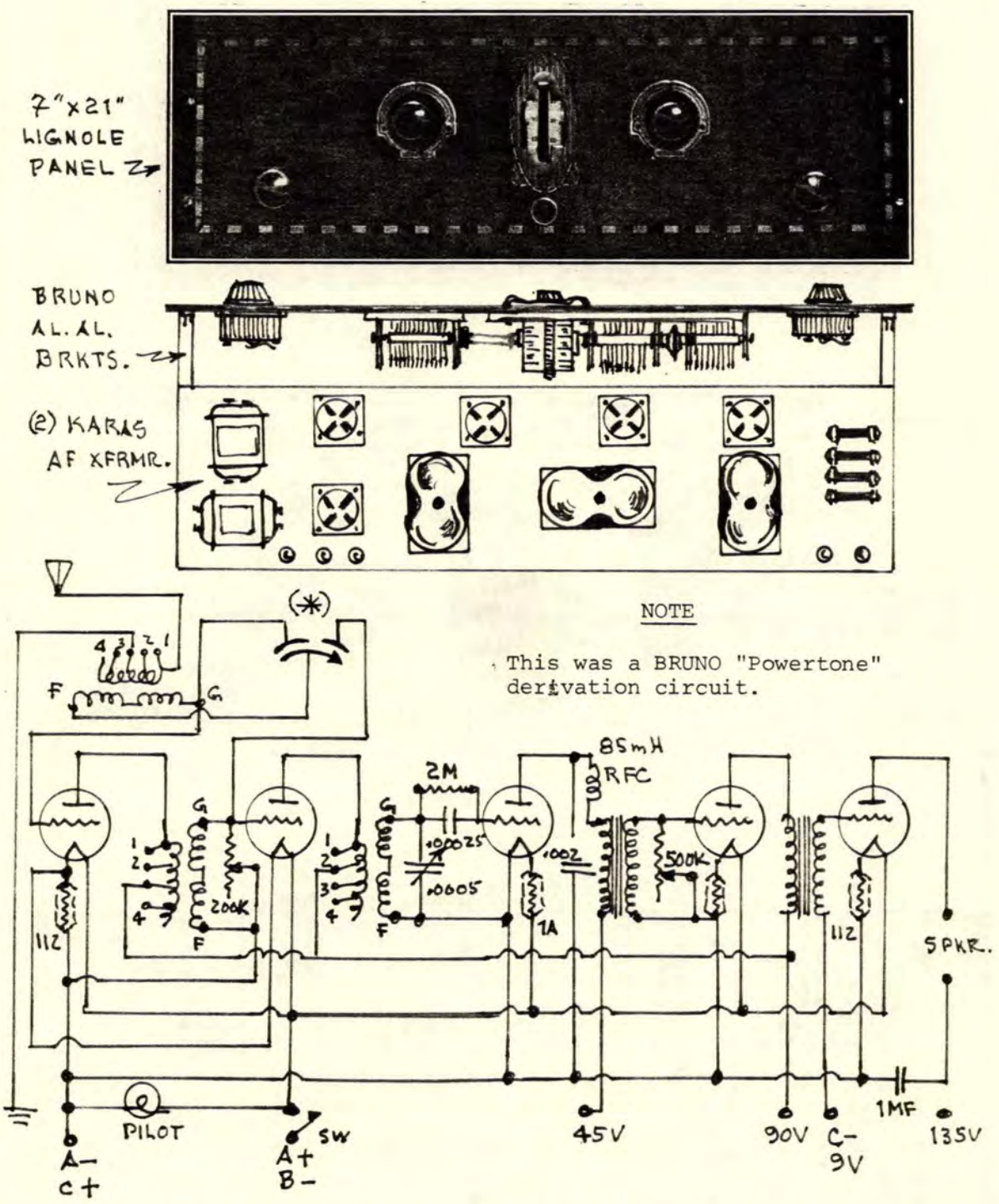

(*) = SIMPLETROL 3-GANG CONDENSER; .0005 EACH SEXION.
GEN-WIN BINOCULAR COILS (3); OR EQUAL.

B-S-T 6 TRF RCVR., 1926 ($40)

PANEL

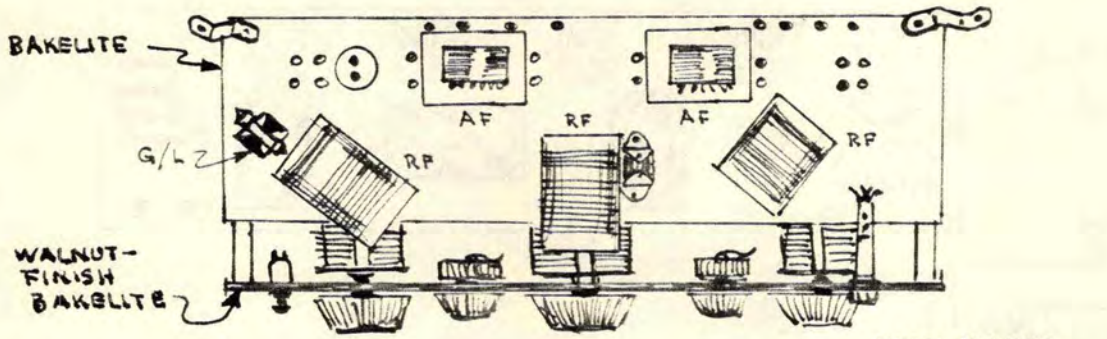

BOTTOM VIEW

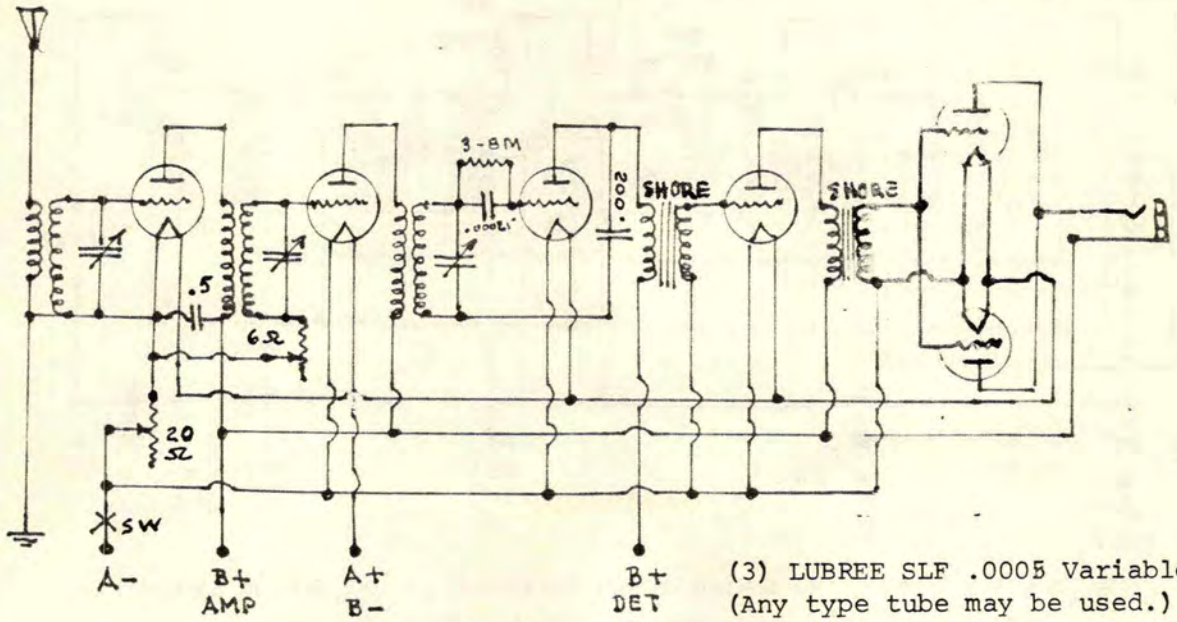

(3) LUBREE SLF .0005 Variables.
(Any type tube may be used.)

Camfield Super-Selective "9"

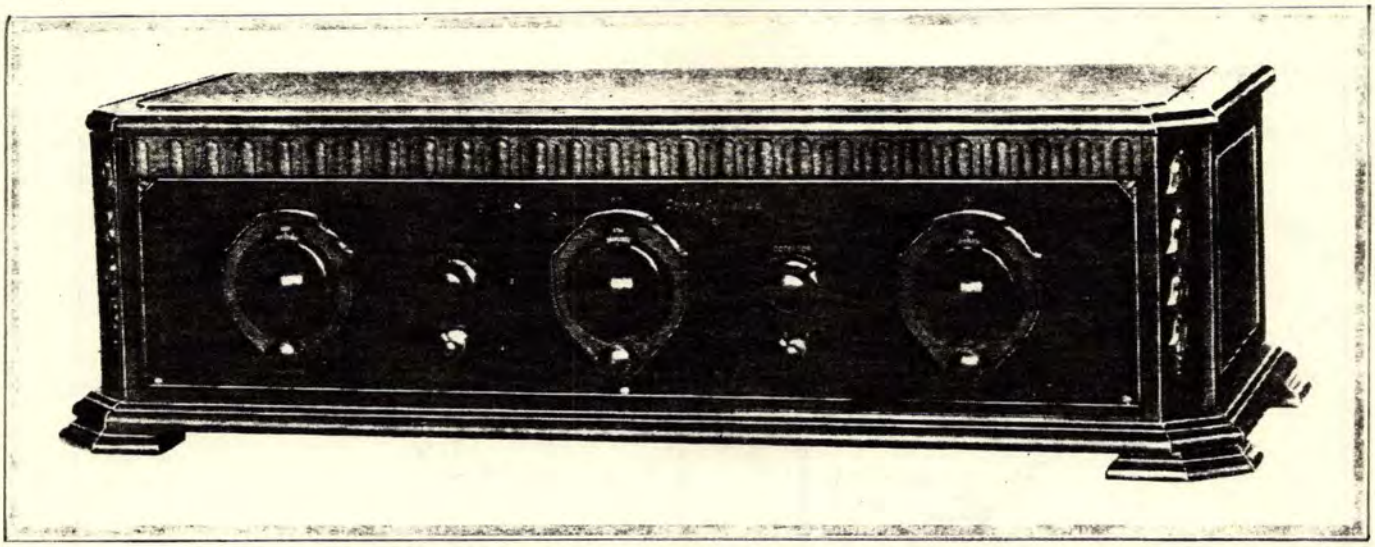

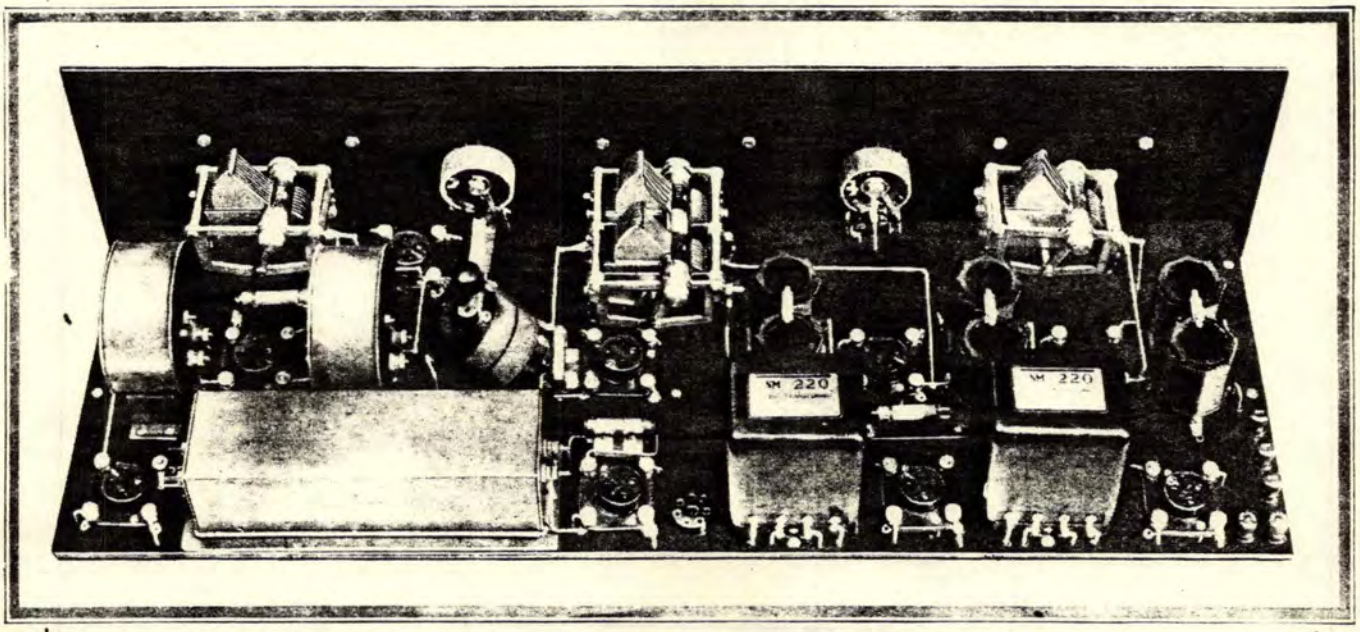

CAMFIELD SUPER-SELECTIVE 9, 1927: Sht. 2

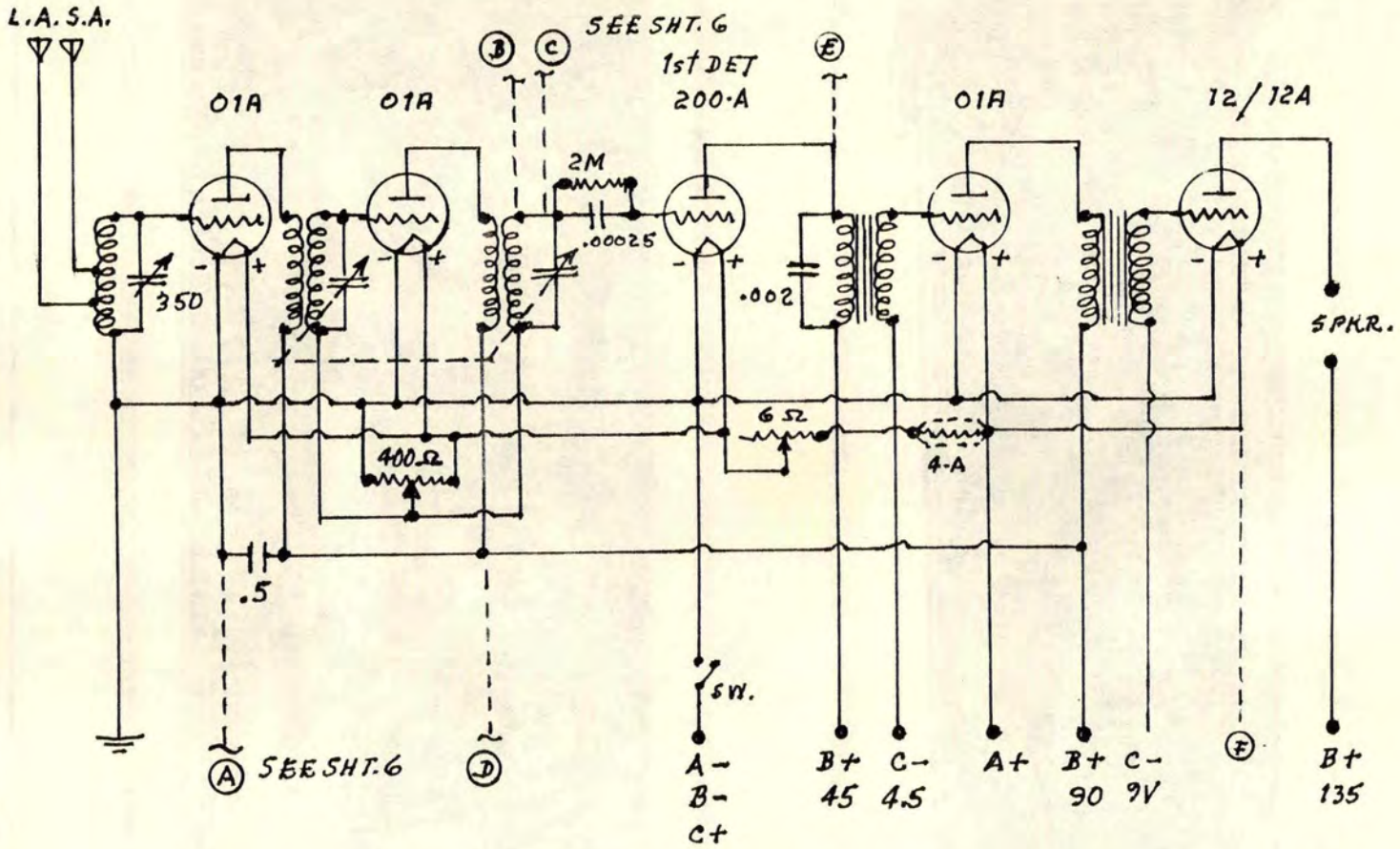

CAMFIELD SUPER SELECTIVE 9

AS A 5-TUBE T.R.F.

SET BECOMES A SUPER-HET WITH THE INCORPORATION OF THE CIRCUITRY DEPICTED ON SHEET 6.

CAMFIELD SUPER-SELECTIVE 9, 1927: Sht. 3

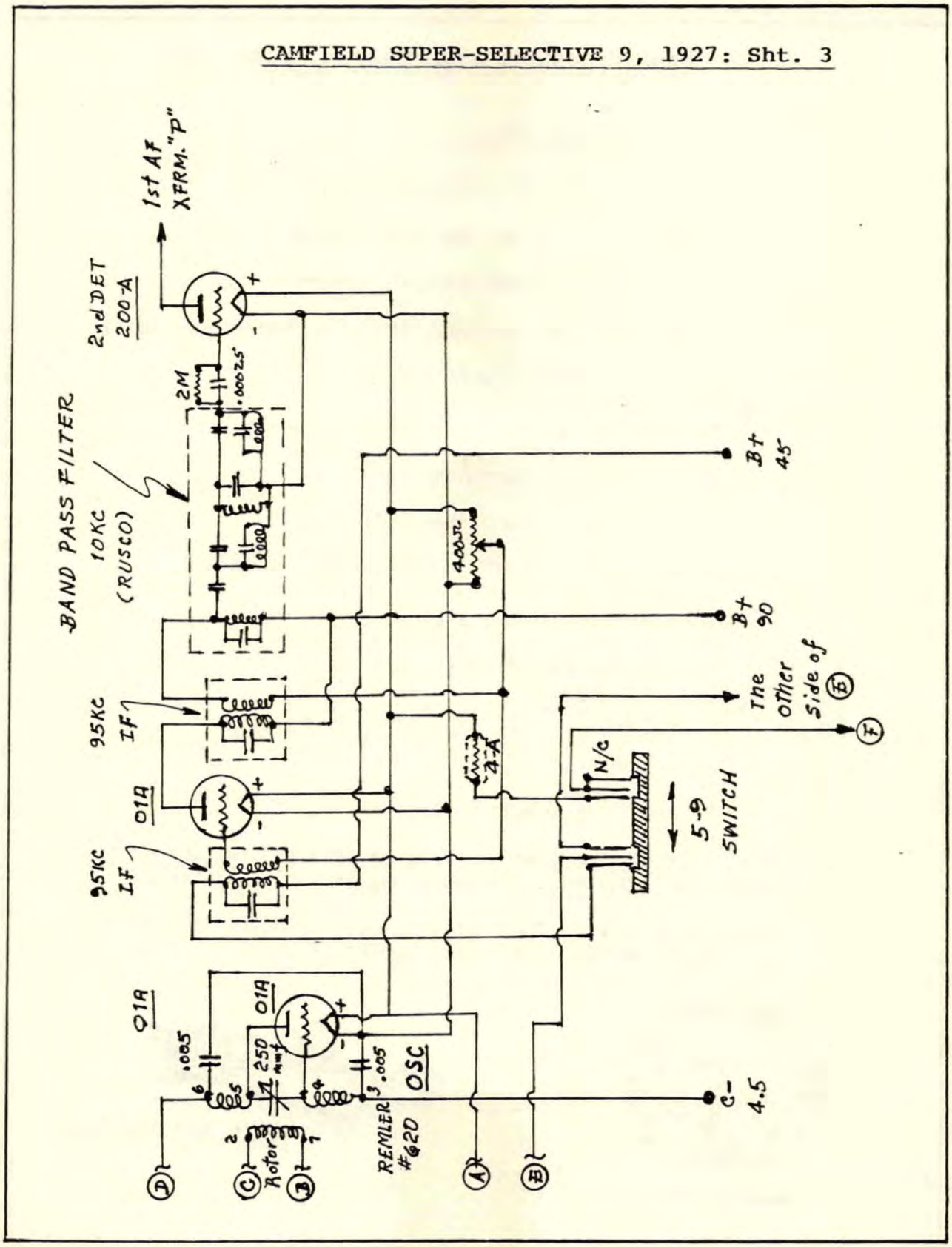

CAMFIELD SUPER-SELECTIVE 9, 1927: Sht.

GENERAL PARTS LIST

1. Panel = 7" x 30": Baseboard = 10" x 29" x 3/16".
2. Camfield 250 mmf Variable Condenser. (#251)
3. Camfield 350 mmf Variable Condenser. (#351)
4. Camfield 350 mmf Dual Variable Condenser. (#352)
5. Camfield #22K "Duoformer" Kit (3).
6. Remler #620 Coupling Unit (OSC. Coil).
7. S-M #220 AF Transformers.
8. Rusco 95KC I.F. Xfrmrs. (2)
9. Rusco 10KC Band-Pass Filter.
10. Karas Sub-Panel Brackets (2).
11. Kurtz-Kasch #592 Dials (2).
12. Jones B.M. Sub-Panel Plug.
13. 4-A Amperites (2).
14. Yaxley Jack-Switch #60.

NOTE: The Remler OSC coil was used by several manufacturers, to which they applied their own name, including Camfield.

Supplied as a kit, the Camfield Super-Selective 9 sold originally for $117.40 in the Spring of 1927.

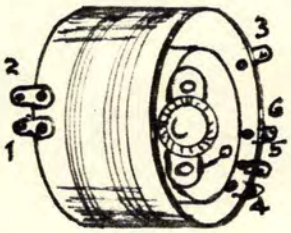

OSC. COIL

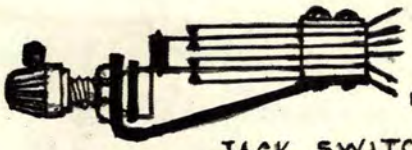

JACK SWITCH #60

CAMFIELD SUPER-SELECTIVE 9; Sht. 3

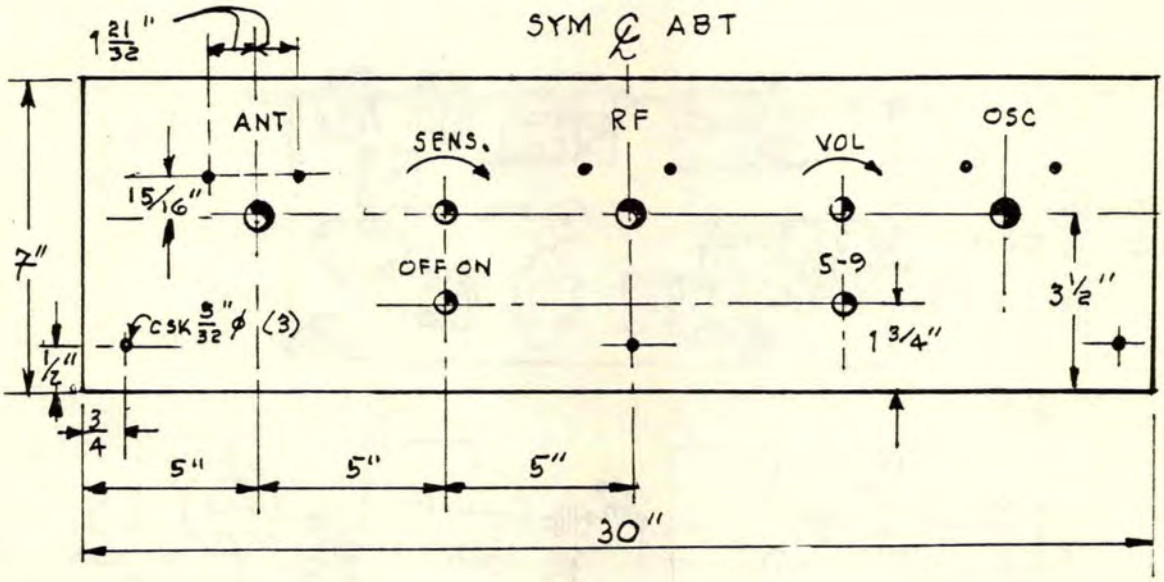

◔ = 9/16" ϕ ◔ = 3/8" ϕ • = 11/64" ϕ

PANEL LAYOUT

BASEB'D. = 10" x 29".

Rusco Type 95 Kc. Transformer, designed for use with the Rusco 10 Kc. Band Bass Filter, Price $6.00

Rusco Type 10 Kc. Band Pass Filter, Price $15.00

TYPE 22 DUOFORMER

Kit of Three Matched Duoformers, $10

CAPACITY-CONTROLLED REGENERATIVE, 1926

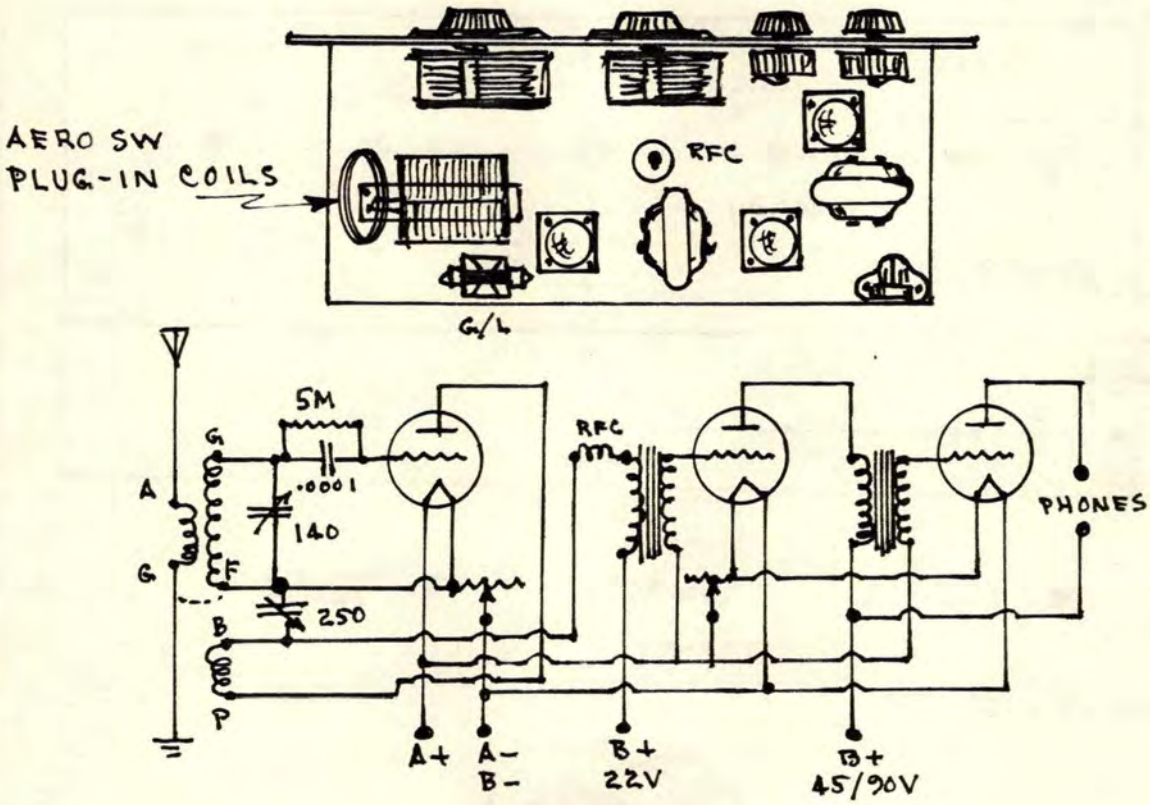

NOTES:

From the standpoint of response only, one regenerative circuit is as good as another. Whether you use tuned-plate, tickler-feedback, inductive-capacity-feed-back, throttle-control, the signal strength at the source remains the same. The above circuit is simple to construct, is stable in operation, and regeneration is smooth.

While most any type of SW coils may be used, you will find that best results are secured from the use of AERO SW coils, horizontal-mount.

CELCO "D"-COIL 7-TUBE SUPER-HET, 1925 ; Sht. 1 of 2

The following sketches and notes derive from the CELCO "D"-coil-equipt receiver designed by Harry J. Marx in 1925, and first presented in the July, 1925, issue of Radio Journal.

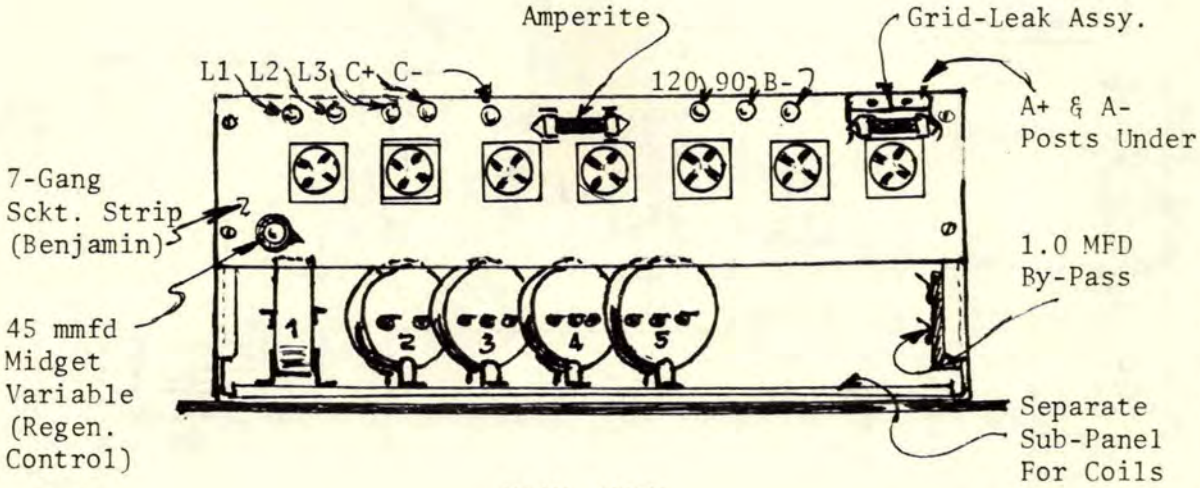

PLAN VIEW

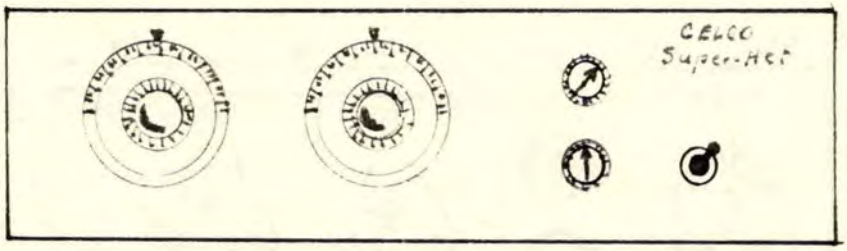

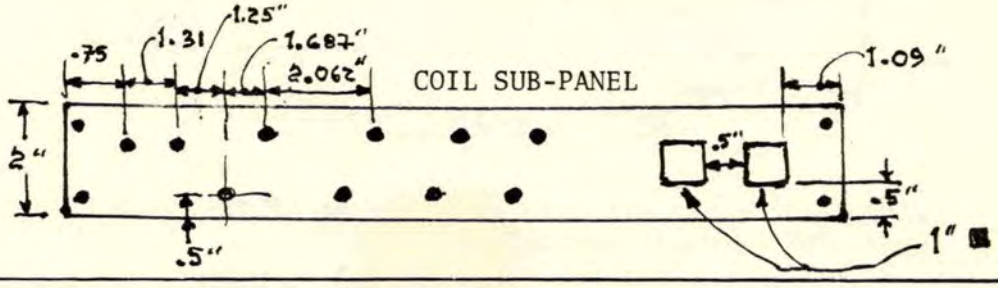

CELCO "D"-COIL SUPER-HET, 1925; Sht.2

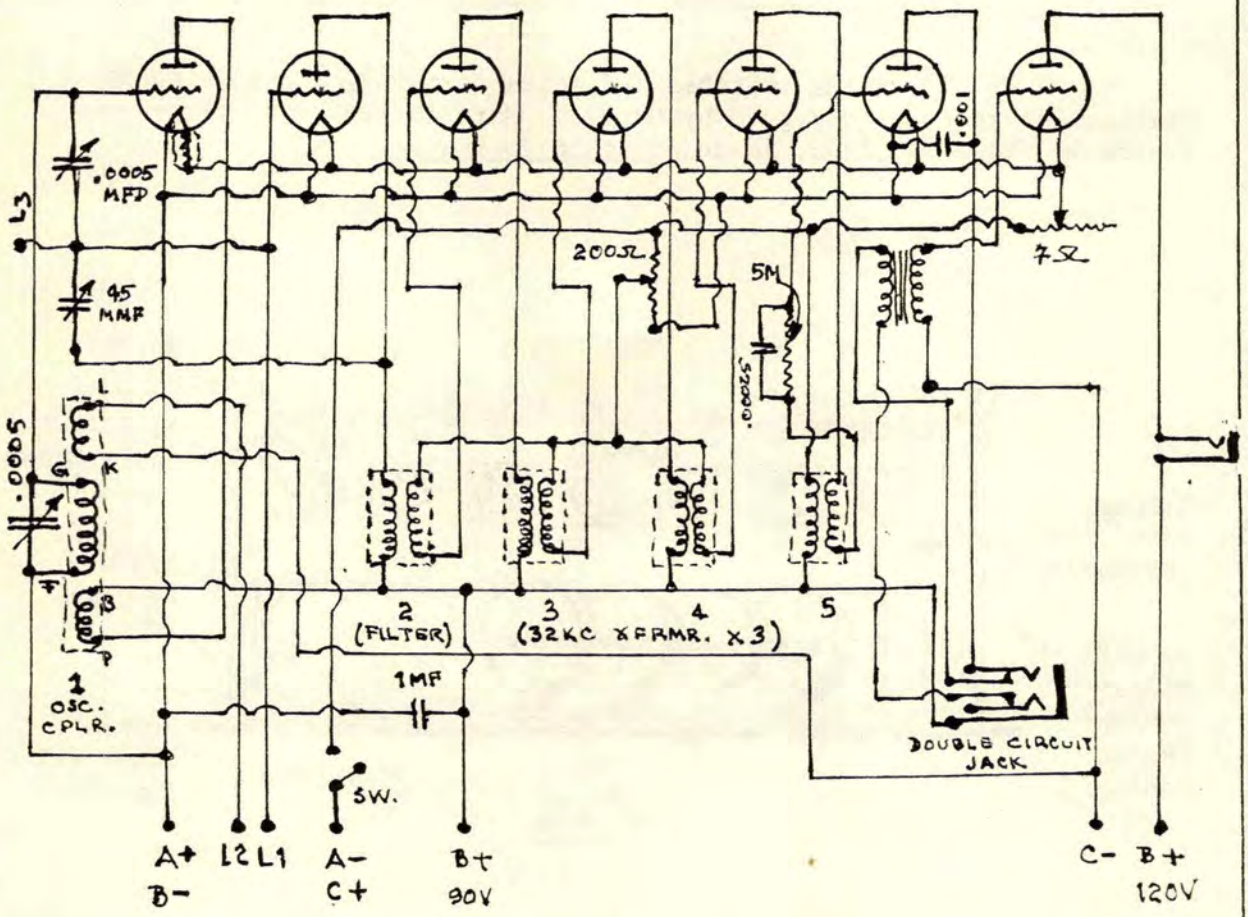

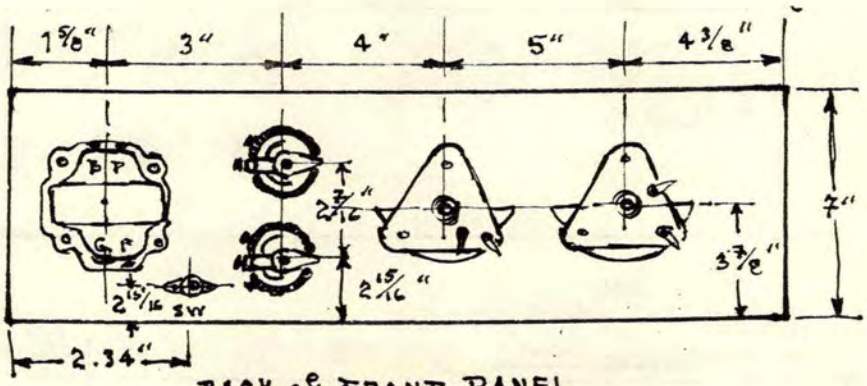

BACK & FRONT PANEL

PANEL = 7" x 18" x 3/16"
BENJAMIN SUB-PANEL BRACKETS.

AF XFRMRS. = Rauland "Lyric"

CISIN's "DOUBLE-SHIELD" 4-TUBE PORTABLE, 1928;Sht.1

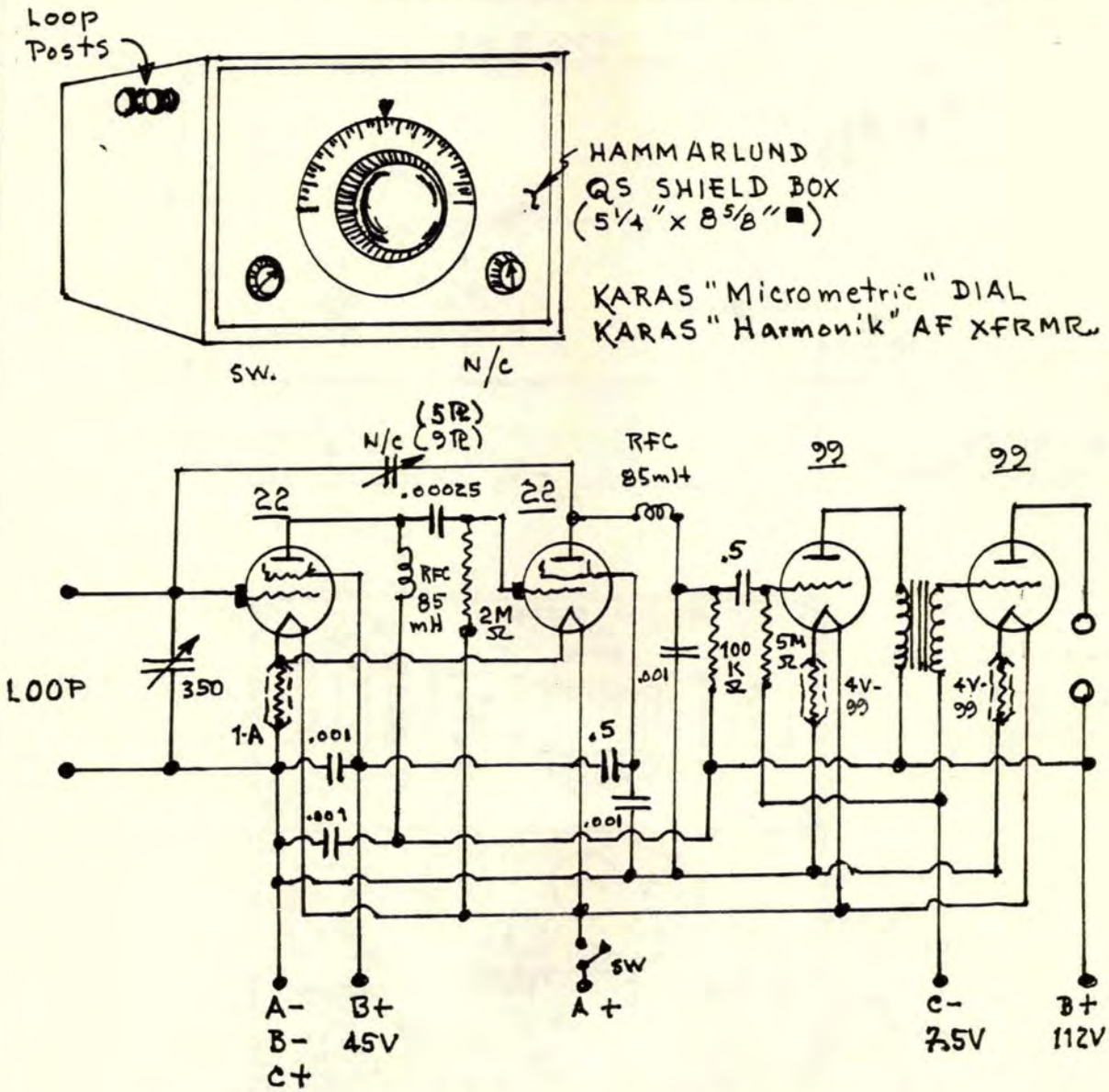

NOTES:
1. Comparable parts may be substituted.
2. Batteries were installed in a seperate OS shield box.
3. Note that Amperite is for 99 tubes (2).
4. Use of an .001 MFD fixed condenser is optional.
Total weight with batteries = 20#.
5. Set can be constructed in a couple of hours.

(RW 6-23-28)

CISIN DOUBLE-SHIELD 4-TUBE PORTABLE, 1928; Sht. 2

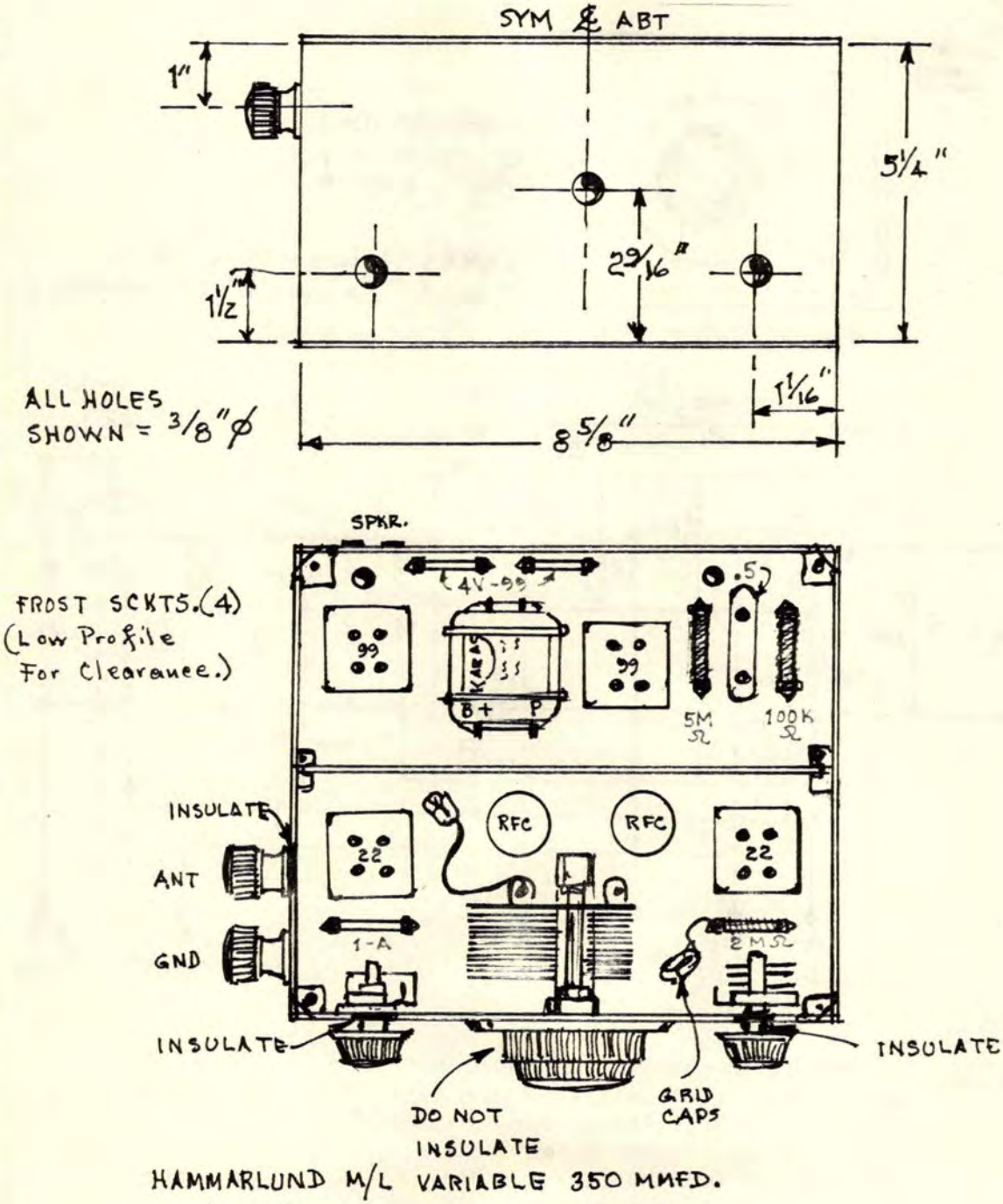

NOTE:
While this set was called a "portable", both units were meant to be packed in a suitcase for "porting" to a vacation site.

CLEARTONE "GOLDCREST" Model 60, 1926

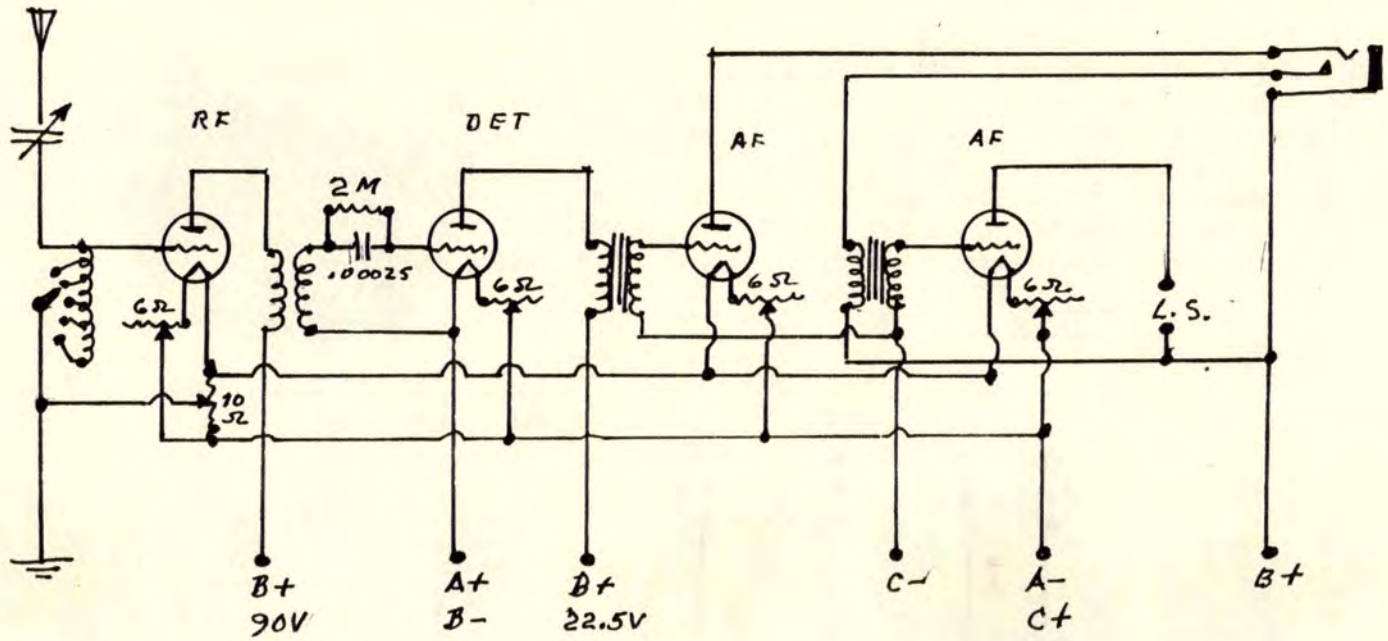

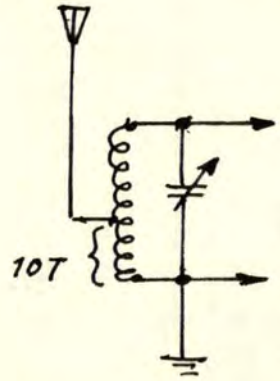

LATER MODEL CHANGE

If you have the early Model 60, I highly recommend that you alter it to incorporate the later change. The tuned ANT version presented unnecessary problems of reception.

(ORSM)

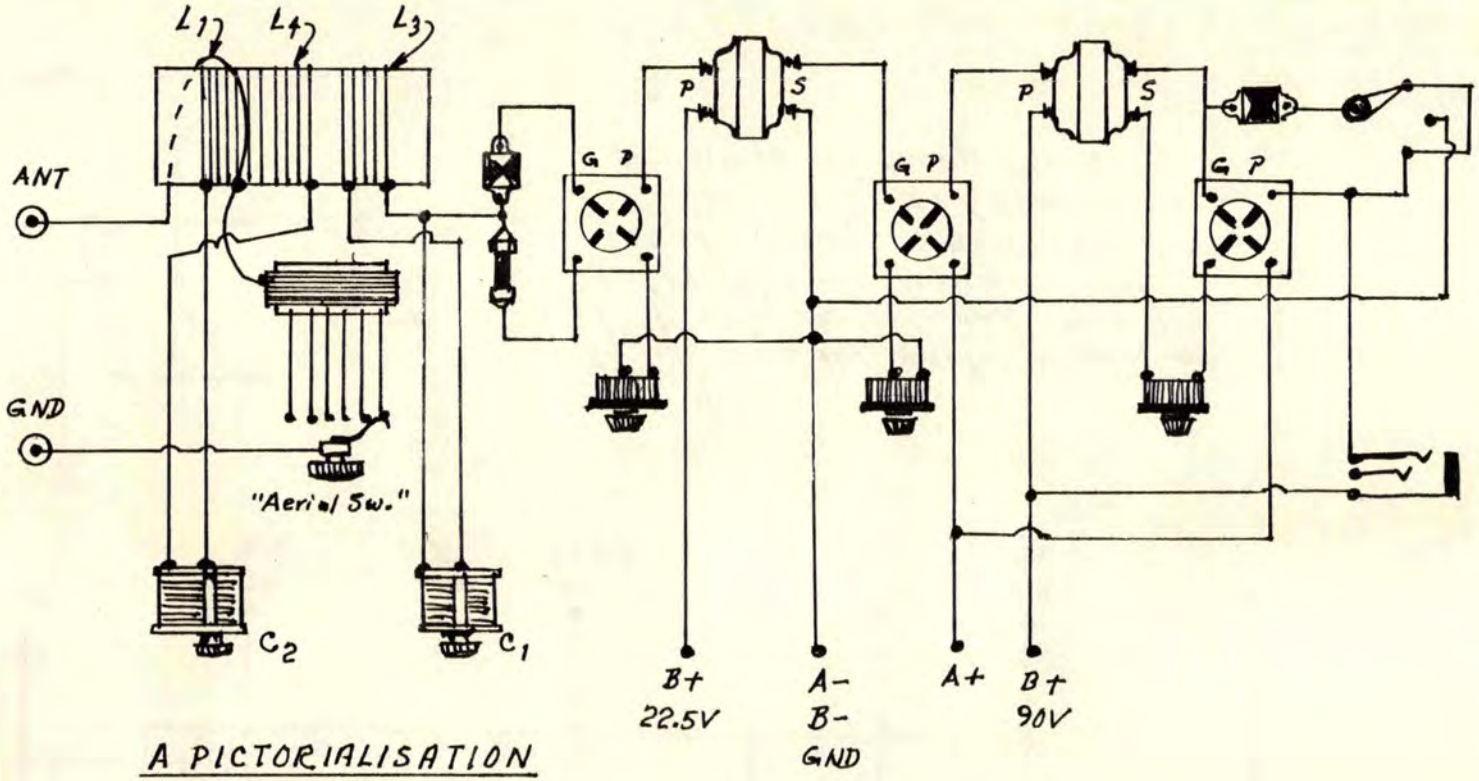

A PICTORIALISATION

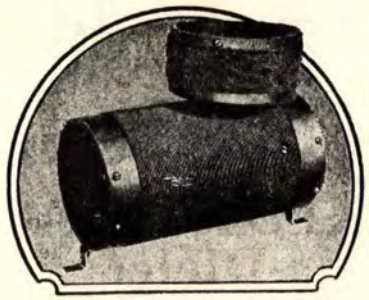

The Peculiar "Precision" Cockaday Coil That Enjoyed Popularity For About One Year.

(1925 - $5)

NOTES:

1. Secondary circuits tuned by variables.
2. Regeneration controlled by C2, so that dial setting is approximately 90°.
3. FIL control increased to just below osc.
4. Adjust C1 for correct wavelength.
5. Coil atop the Cockaday coil connected to the "Aerial Switch"; six taps on coil and switch.

COCKADAY 4-CIRCUIT REGENERATIVE TUNER (Sht. 1)

COCKADAY 4-CIRCUIT REGENERATIVE TUNER, (1923) (Sht. 2)

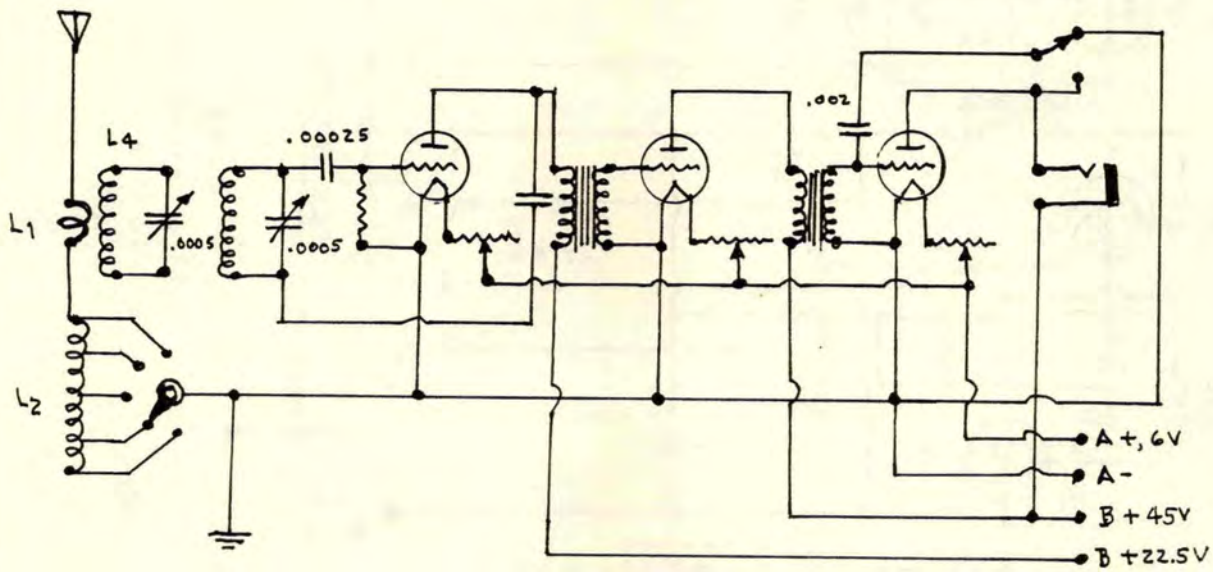

COIL DATA

Coil Form = 5.375" x 3½" Ø for L1, L3, L4.
1.375" x 3¼" Ø for L2.

L1 = One turn, ¼" from L4.

L2 = 43 Turns, tapt at 3,7,13,21,31; bank-wound; separate form for PRI.

L3 = 65 Turns, #18 SCC, ¼" from L4, in same direction. (This was called a "Stabilizer Coil".)

L4 = 34 Turns, #18 SCC - SEC coil.

(R 10-23)

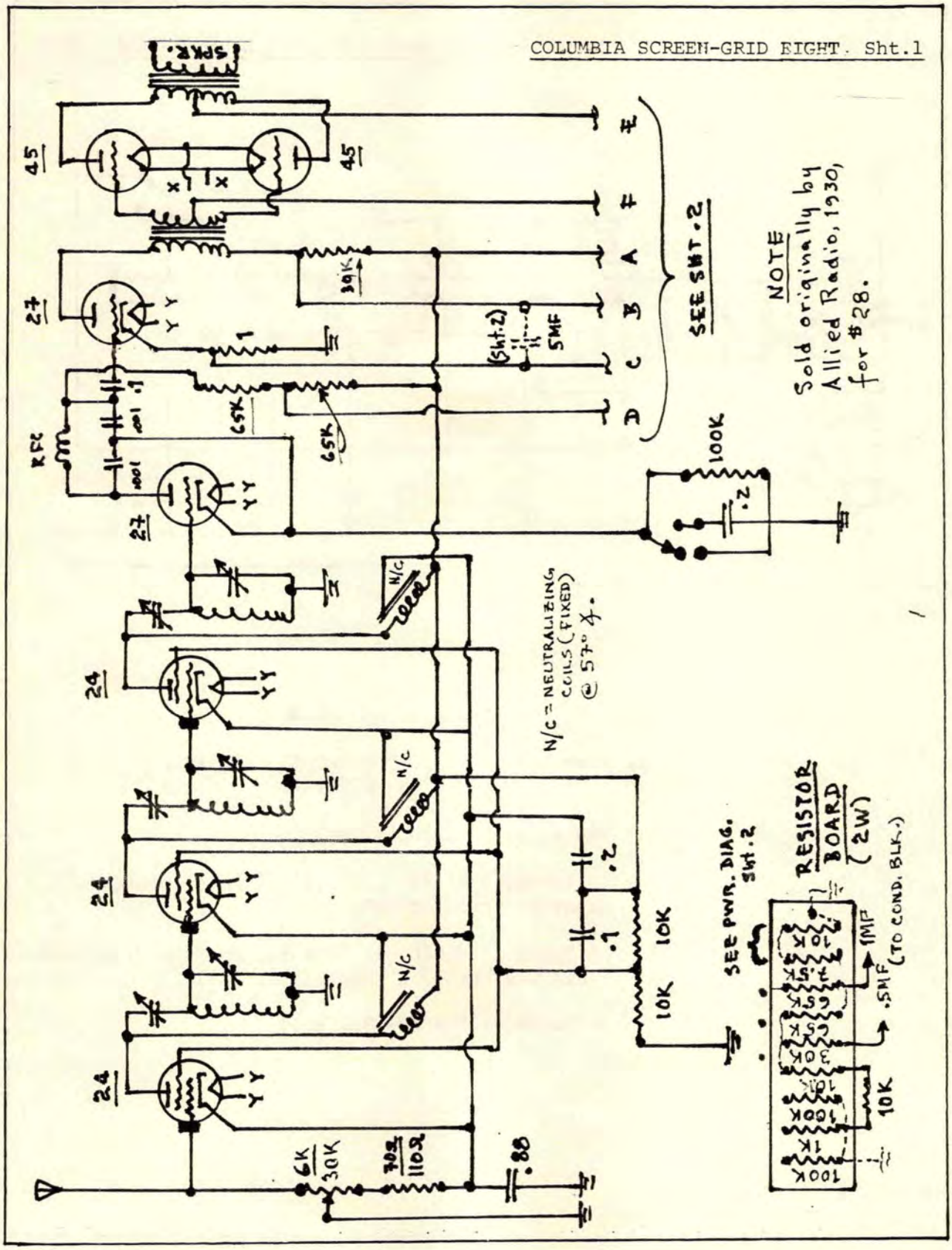
COLUMBIA SCREEN-GRID EIGHT. Sht.1
SPKR.
45
45
27
27
24
24
24
RFC
.1
.001
.001
39K
1
65K
65K
(Sht.2)
SMF
D
C
B
A
F
E
SEE SHT.2
NOTE
Sold originally by Allied Radio, 1930, for $28.
100K
.2
N/C
N/C = NEUTRALIZING COILS (FIXED) @ 57° ∡.
.2
.1
10K
10K
SEE PWR. DIAG. SHT.2
RESISTOR BOARD (2W)
100K
1K
100K
30K
5K
5K
10K
1MF
.5MF
(TO COND. BLK.)
10K
6K
30K
70Ω
110Ω
.08

COLUMBIA SCREEN-GRID 8, Sht. 2

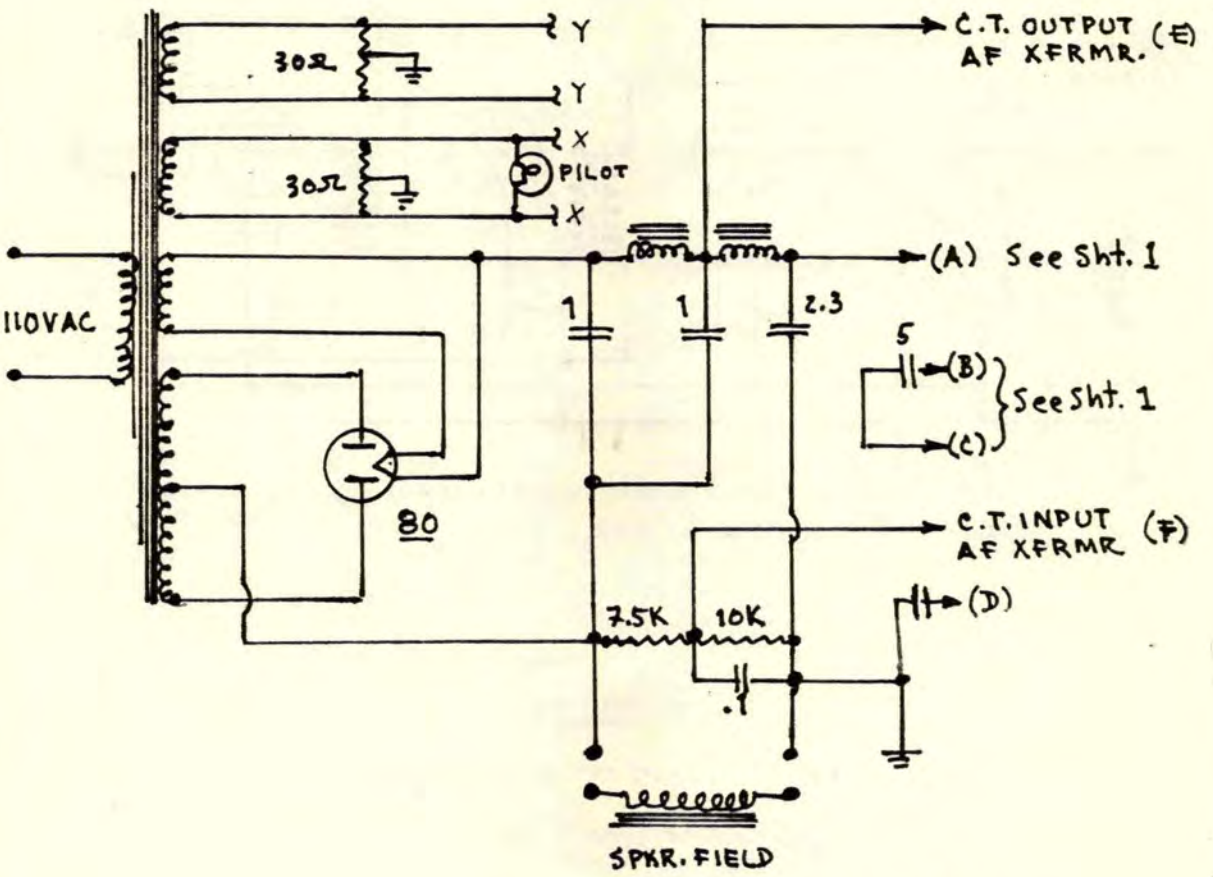

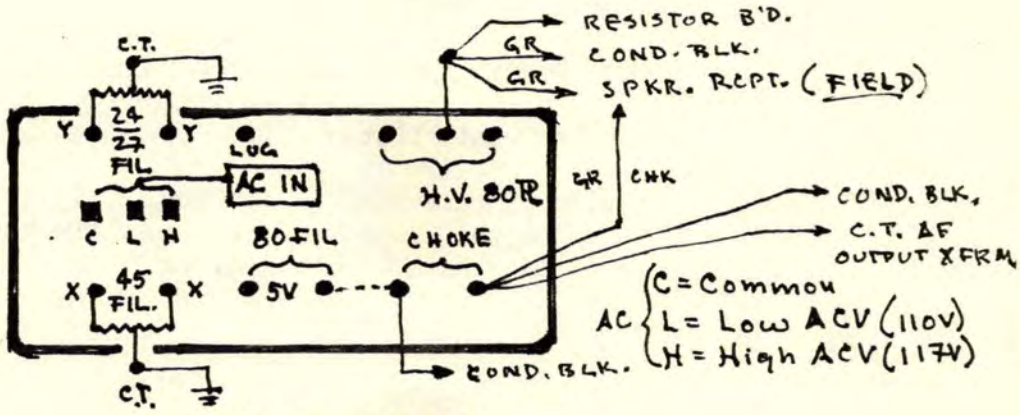

ORIGINAL POWER XFRMR. CONTACTS (Bottom View)

CROSLEY XJ RECEIVER, 1925

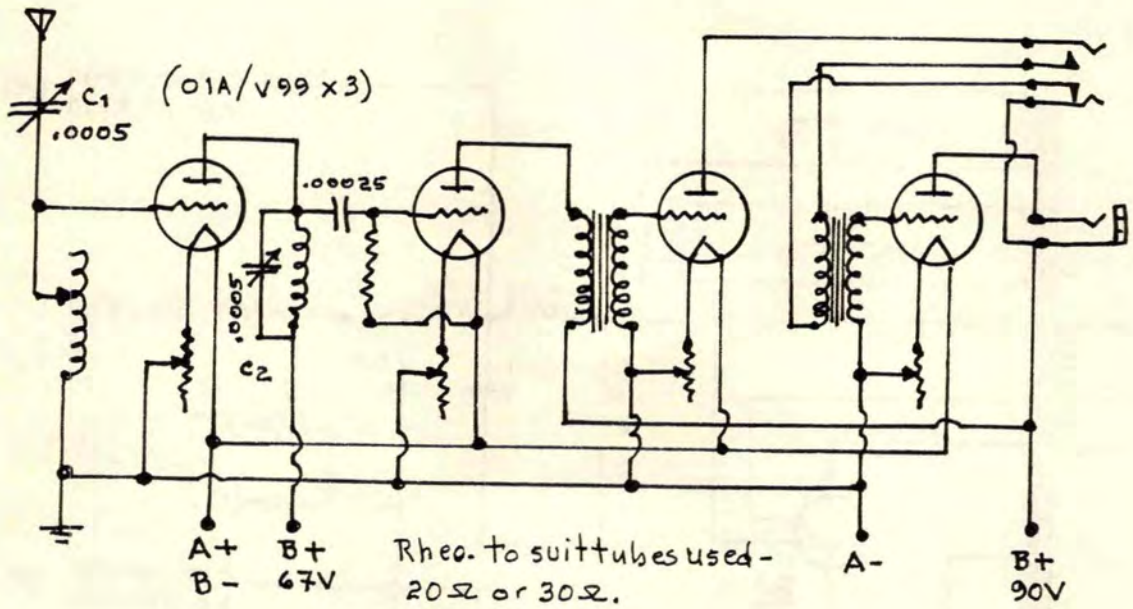

NOTES

(4) FIL Rheostats @ 10-ohms each.

Grid-Leak = 1 to 3 Megohms,

GRID CONDENSER = .00025 MFD.

COIL FORMS: ANT Coil = 45T #22 DCC, 3"Ø.
Plate Coil = 45T #22 DCC, ".
ANT coil tapt @ 7, 15, 23, 30 Turns.

Tuning of this set was not simple. Variable C2 tunes the Plate, and can cause the tube to oscillate, making tuning critical

DAVEN AC-5 RCVR., 1928

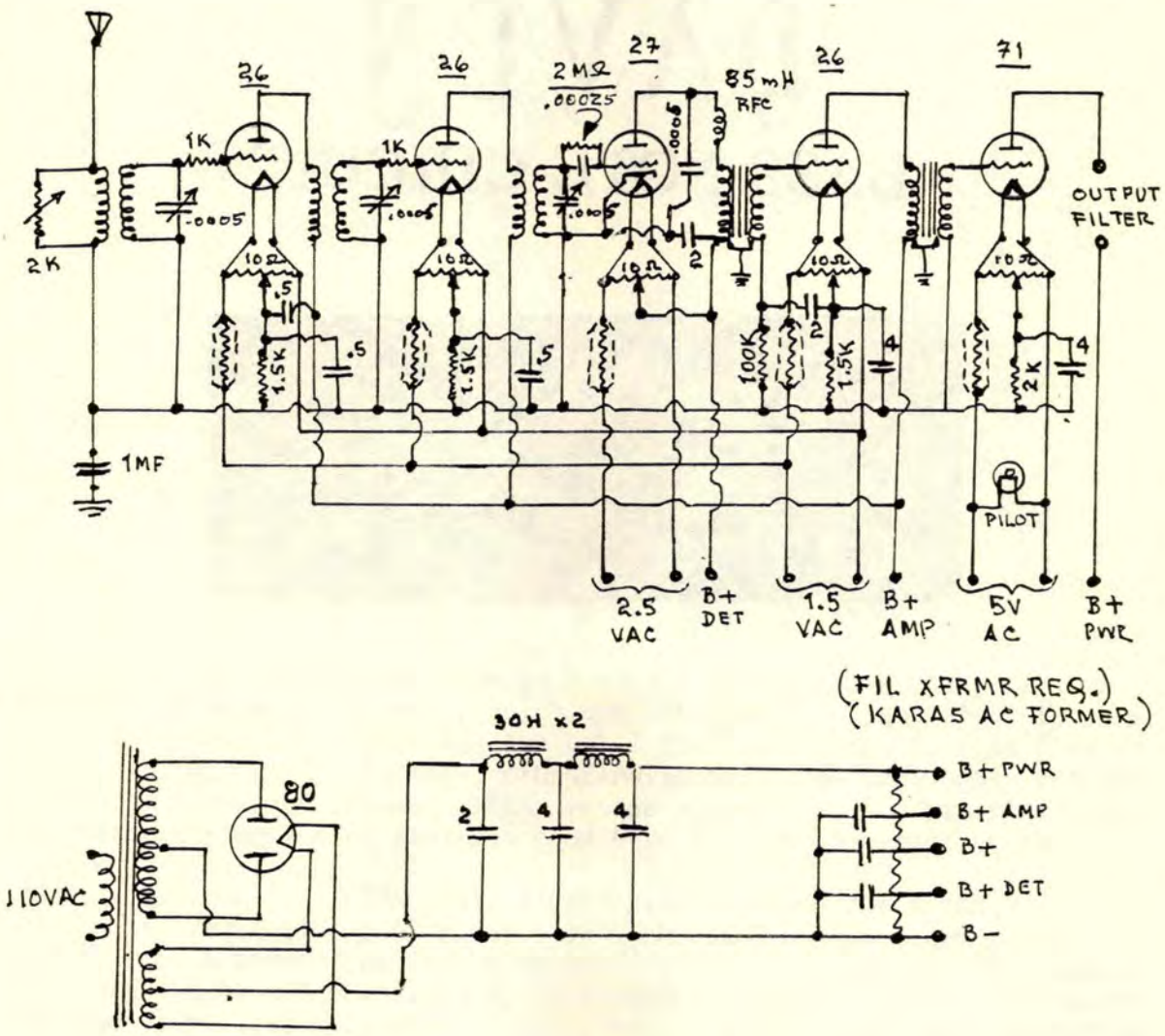

PANEL = 7" x 24" (Cortland)
(6) Binding Posts
HAMMARLUND Drum Dial
HAMMARLUND .0005 Variables (3)
THORDARSON "Overtone" AF Transformer, (2) required; originally $6 each.
KARAS AC Former FIL xfrmr.

10-ohm Resistors are C.T.
Ballasts required for 26, 27, 71.
(2) Speaker Tip Jacks.
(13) Resistor Mountings. (DAVEN)

(RW 1.28.28)

DAVEN
BASS NOTE CIRCUIT

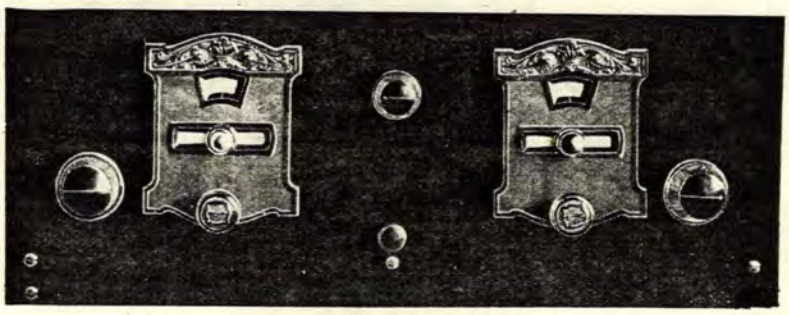

DAVEN was probably the most aggressive of pioneers in the area of resistance-coupled audio amplifiers, perhaps because they wanted to sell more of their excellent fixed resistors. Others, such as Welty, Monford, Sonotron, Veby, and Allen-Bradley, quickly joined in, but the DAVEN unit had the edge in eye-appeal. All, however, were more or less equal in performance, and all have been detailed in a seperate Monograph.

While adaptable to any circuit, the DAVEN unit was dramatised in 1926 by means of the "Bass Note Receiver", in two versions, each consisting of 2-stages of TRF controlled by a pot, and solenoid-type coils designed by the U.S.Bureau of Standards. A balancing condenser held both variables in alignment. The only difference between the two versions was that the second version used two dials instead of three, and a "butterfly" variable. The kits sold for $65.

The second version is detailed herein. The oddly shaped dials were Bakelite, from the Brooklyn Metal Stamping Company - the only instance I've found for their specification. DAVEN remained in Radio well into the Thirties, moved into sporting-goods, and later hi-fi equipment, their main shop being on East 42nd Street.

In 1928 they offered a by-then conventional AC 5-tube receiver, in which the R-C unit was not used.

* * *

Daven Bass Note

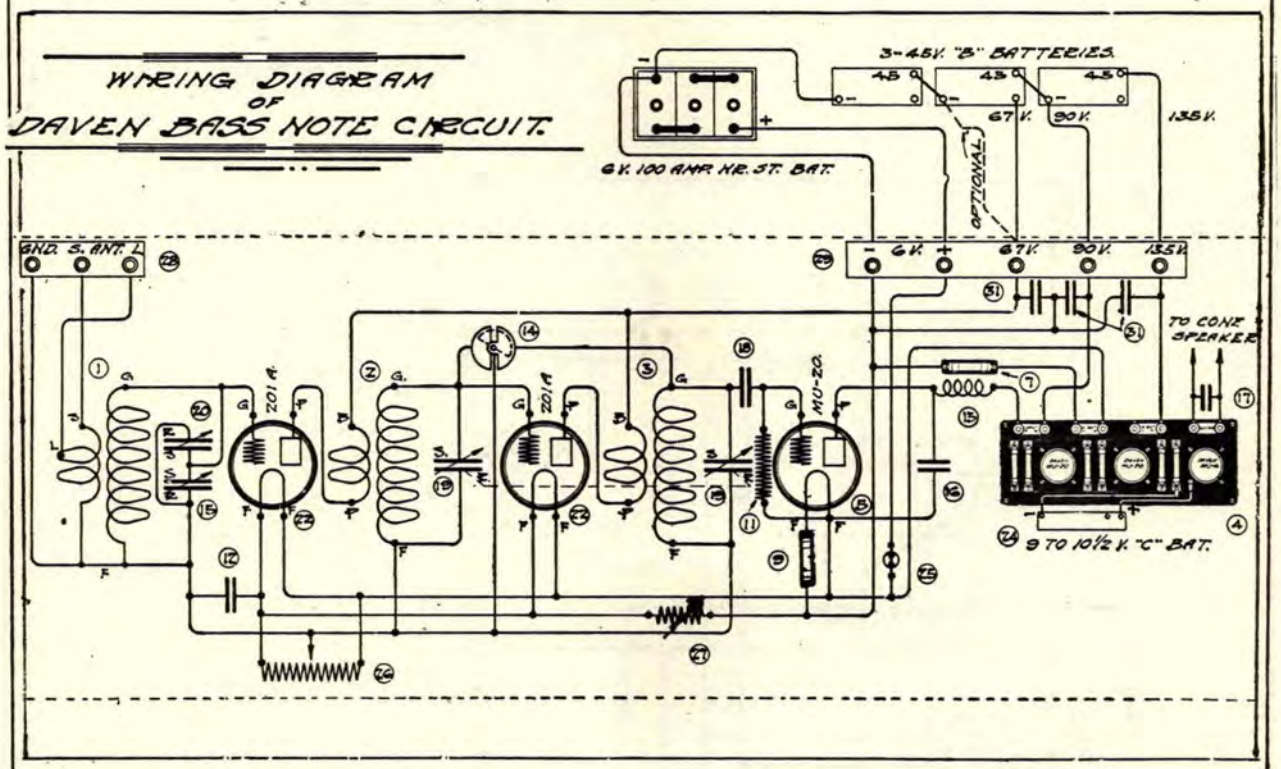

The wiring shown schematically, except for the audio amplifier, which is shown pictorially.

The schematic shown above appeared in RADIO WORLD for November of 1926, and shows the second version of the DAVEN Bass-Note receiver. The first version appeared in April of 1926, and was a conventional TRF with three dials. The exception was, of course, the DAVEN resistance-coupled audio amplifier and DAVEN's Hi-Mu tubes.

The second version, detailed herein, obviated one dial by using a dual-gang variable condenser, and adding a "butterfly valve" - a split-stator miniature variable, used for balancing the RF stages. A conventional schematic of the above circuit will be found over-leaf.

The enclircled numbers shown above have been kept for this article, so that identification should be quite easy. I have constructed the second version of the DAVEN Bass-Note set, and with DAVEN's MU-20 and MU-6 tubes in the amplifier, works exceedingly well.

DAVEN BASS-NOTE RECEIVER, 1926: Sht. 2

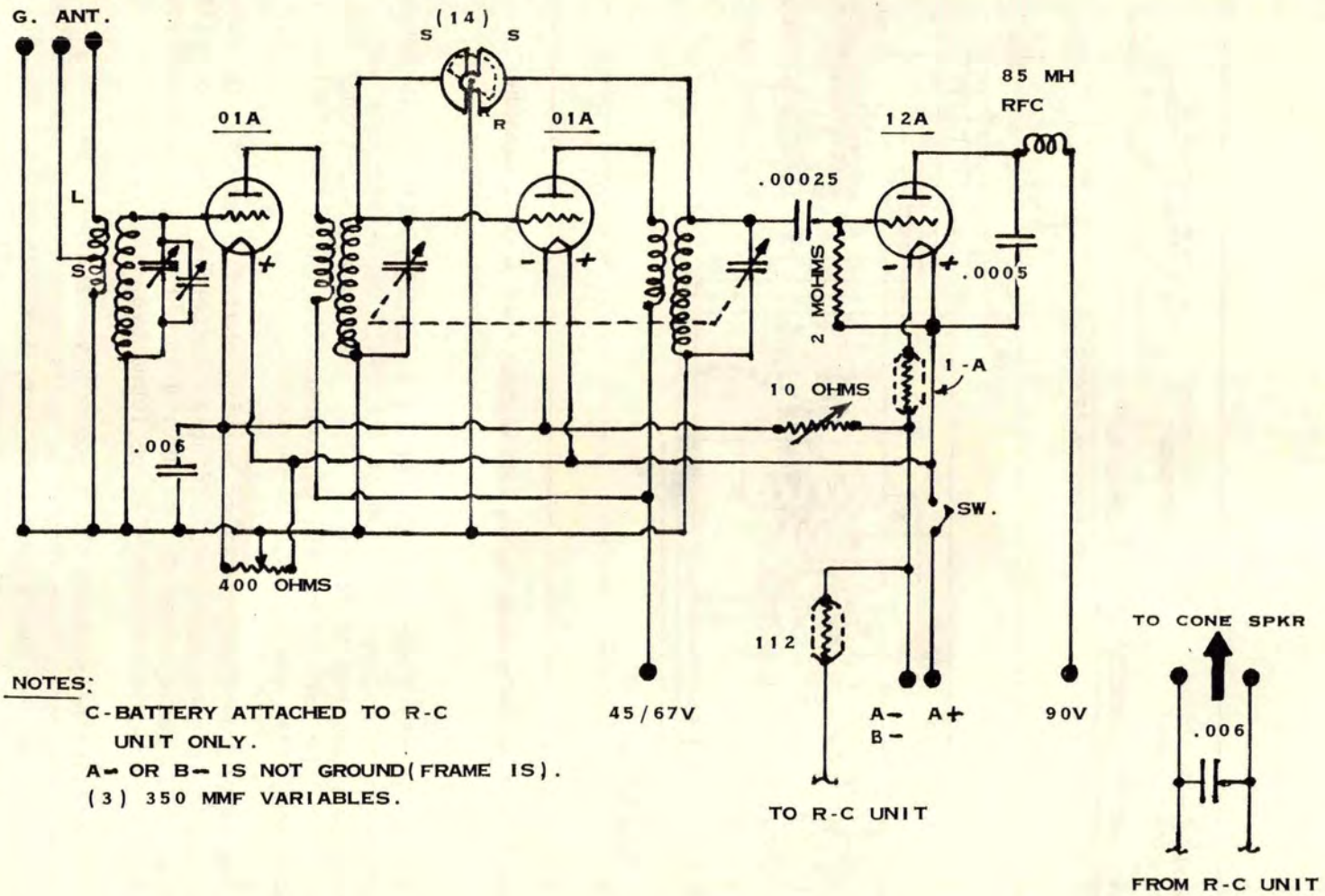

NOTES:

C-BATTERY ATTACHED TO R-C UNIT ONLY.

A- OR B- IS NOT GROUND(FRAME IS).

(3) 350 MMF VARIABLES.

(RW 11-13-'26)

DAVEN BASS-NOTE RECEIVER, 1926; Sht.3

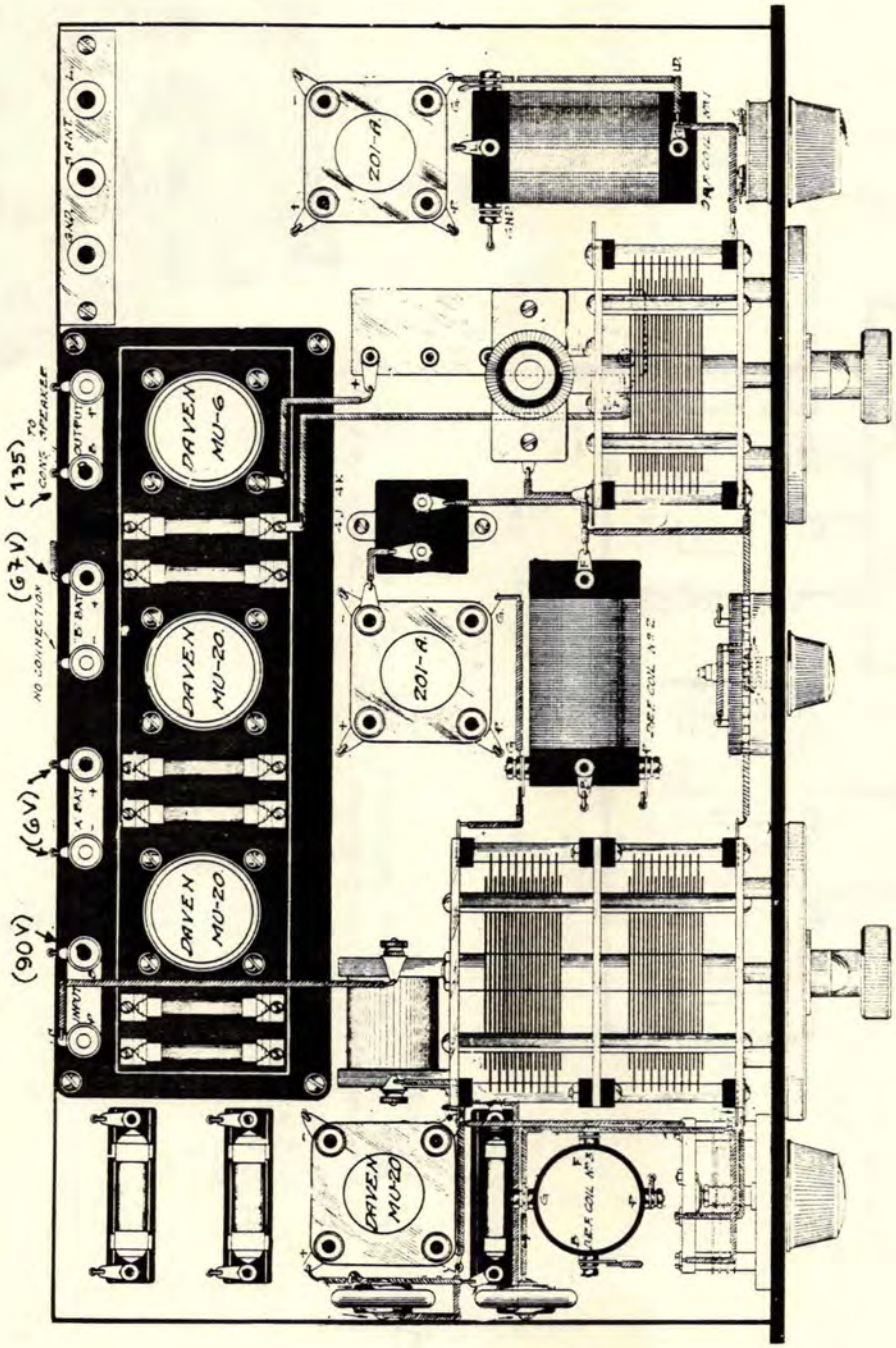

GENERAL ASSEMBLY

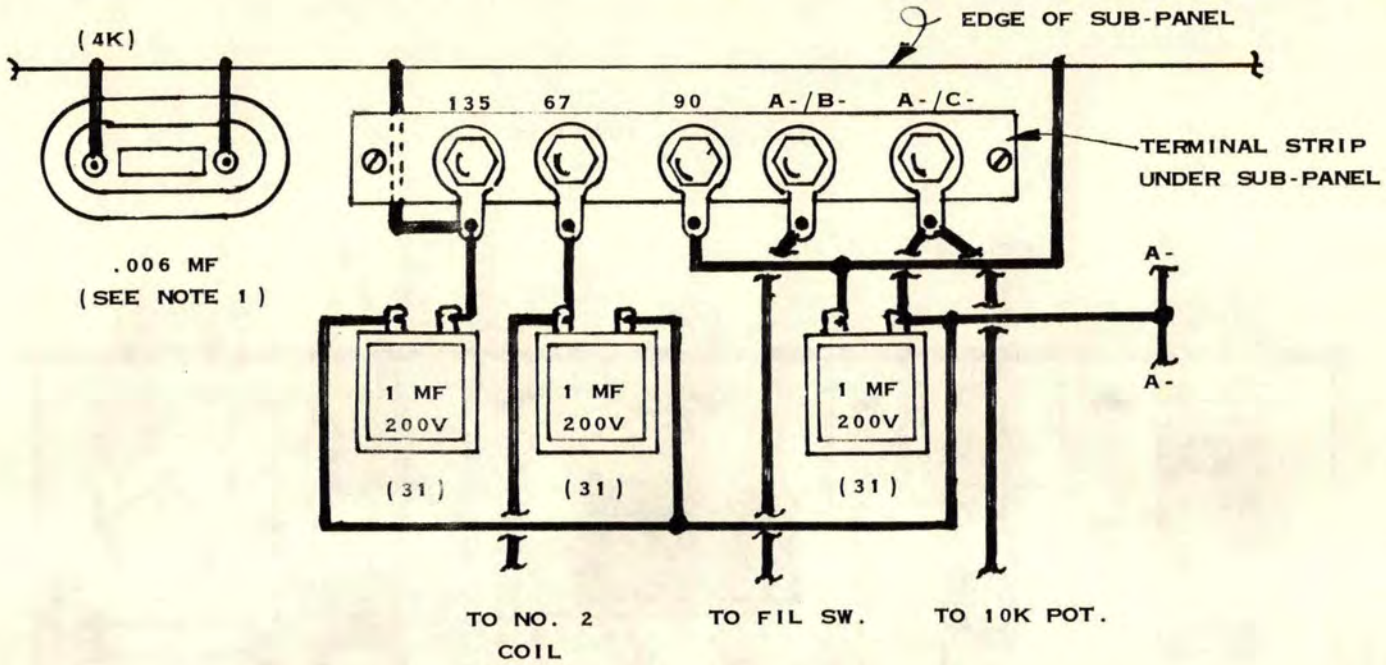

NOTES:

1. CAPACITOR MAY BE 0.1, 0.25, .006 MF.
2. TERMINAL 19E IS A GROUNDED FRAME CONNEXION, & NOT A STATOR CONNEXION AS SHOWN ON ORIGINAL DAVEN DRAWINGS.
3. SECOND VERSION OF THE DAVEN R-C AMPLIFIER EMPLOYED NICKEL-PLATED TUBE SKIRTS INSTEAD OF MOULDED BAKELITE.
4. C-BATTERY (+) TERMINAL CONNECTED TO (4K); (−) TERMINAL CONNECTED TO (4J).

(RW 11-17-'26)

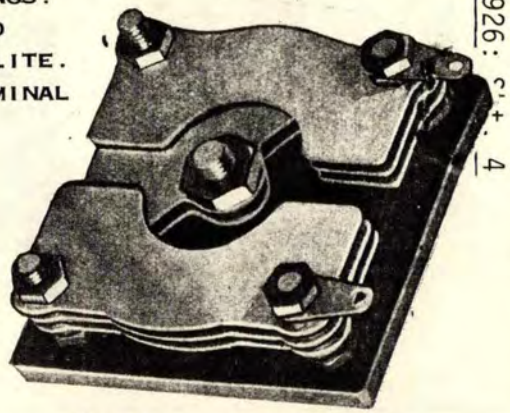

REAR view of part No. 14.

DAVEN BASS-NOTE RECEIVER, 1926; Sht. 5

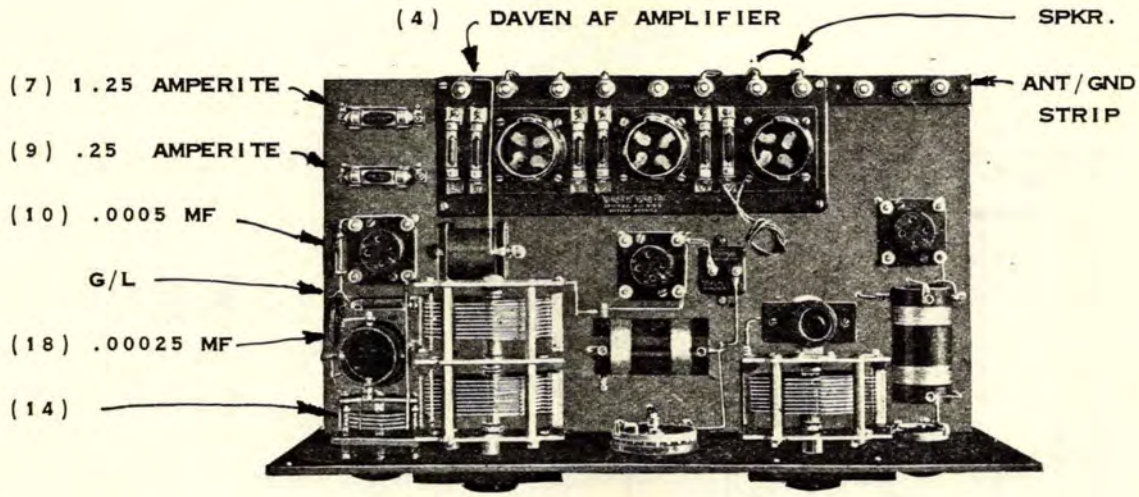

PLAN VIEW

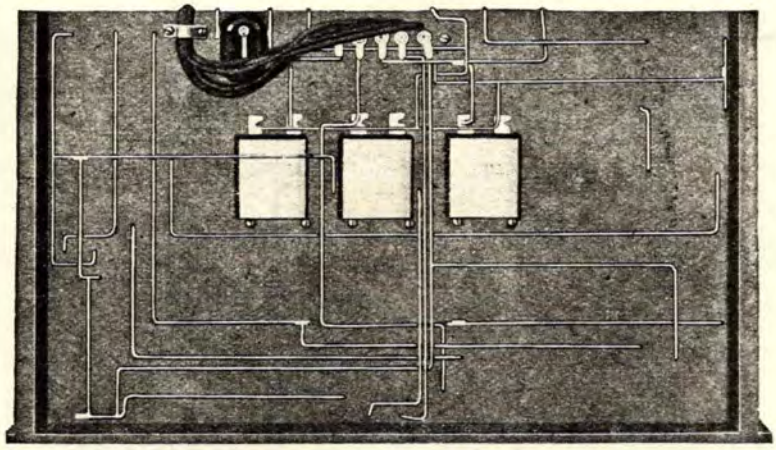

BOTTOM VIEW

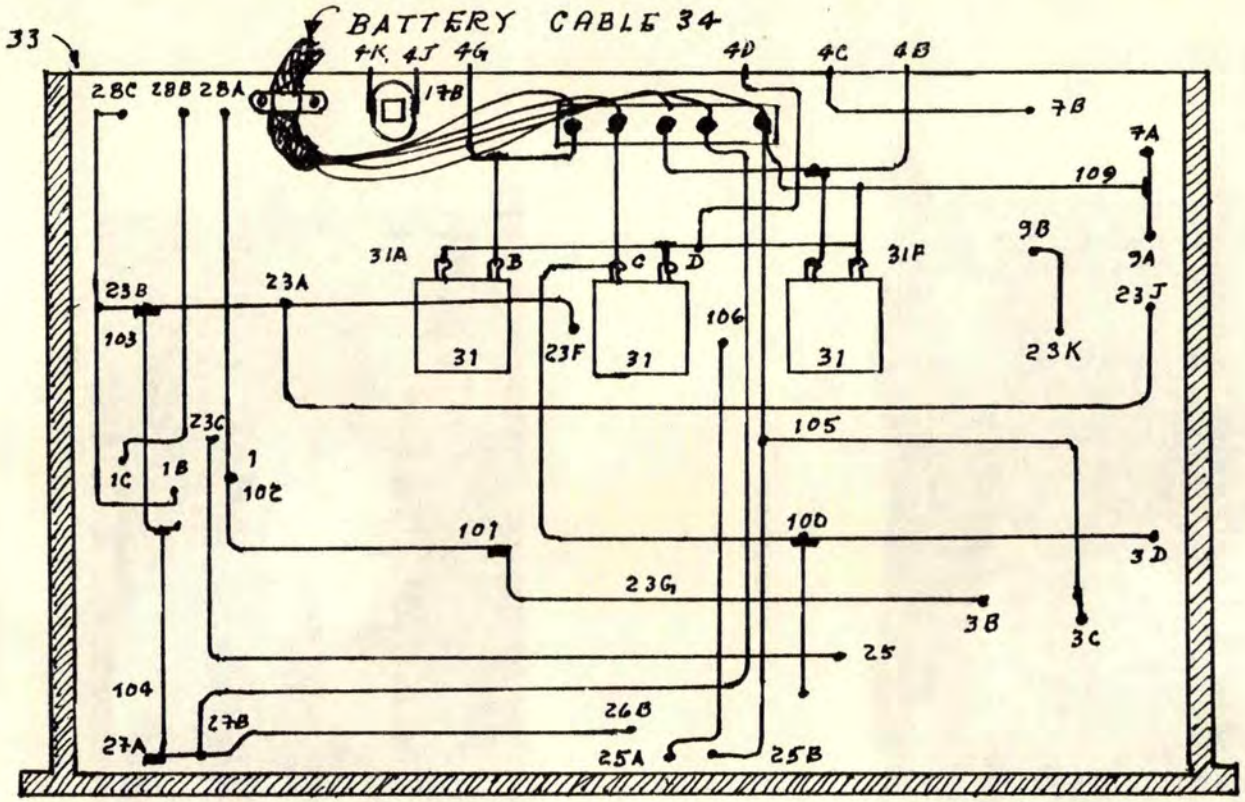

BOTTOM VIEW

The under-side of the DAVEN Bass-Note receiver reflected what was probably the neatest layout of buss-bar within my ken. The 3-digit numbers were DAVEN's original number for making soldered connexions. The sketch above may be used in conjunction with the bottom view shown Page 106.

DAVEN BASS-NOTE RECEIVER, 1925:Sht.5

OPERATING INSTRUCTIONS

1. Set Pot. and Rheo. at half-way mark.
2. Set both dials at approximately the same mark.
3. Rock both dials until a signal is heard.
4. Adjust Pot. until a slight squeal is heard.
5. Turn Pot. slightly c.c.w.
6. Re-tune both dials for max. signal.
7. Trim the Pot. just a hair.

NOTES: The 400-ohm Rheo. can be used as a VOL control and as a Selectivity adjustment. The set is most selective with the Rheo. at about ¼ or ½ from the c.c.w. position.

The "butterfly" variable (Item 14), called a "Compensator" by Daven, is essentially a trimmer for the dual variable. For locals, it has little effect, but for DX the rotor should be in its neutral position - i.e., half-way between the stators. At a signal, rock the knob.

The balancing condenser on the rear of the 250mmf variable should be adjusted on a signal that comes in at about 50 on the dials. It may then be forgotten.

* * *
* *
*

IMPROVED DAVEN BASS-NOTE RECEIVER, 1926: Sht.1

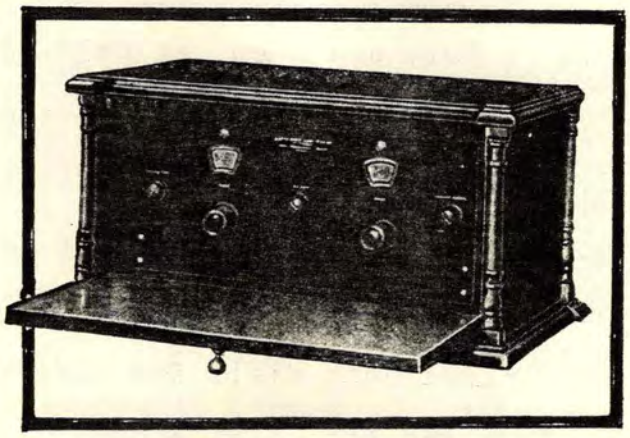

The set depicted above was Daven's offering of the Bass-Note set as a complete package, with the usual "prices higher west of the Rockies", a matter of $10. Rockey's re-design was simpler in a couple of instances, and the coils, shown below, were new, available from Daven, or you could wind your own. The parts for the Improved Bass-Note were offered by several dealers for $60.

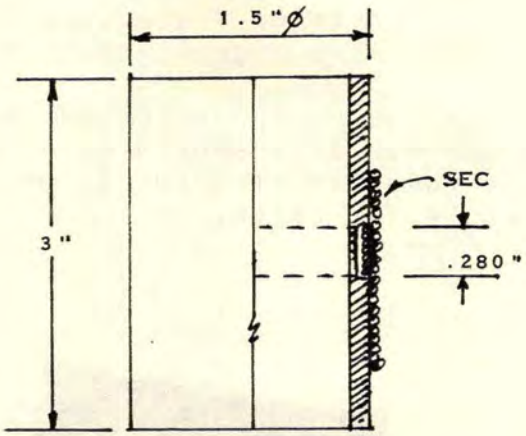

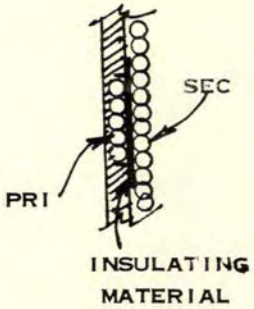

NO. 1 COIL	NO. 2 COIL	NO. 3 COIL
PRI - 13T, TAPT AT 10T	PRI - 18T	PRI - 15T
SEC - 105T	SEC - 105T	SEC - 105T

PRI WOUND WITH NO. 30 D.S.C.
SEC WOUND WITH NO. 26 D.S.C.

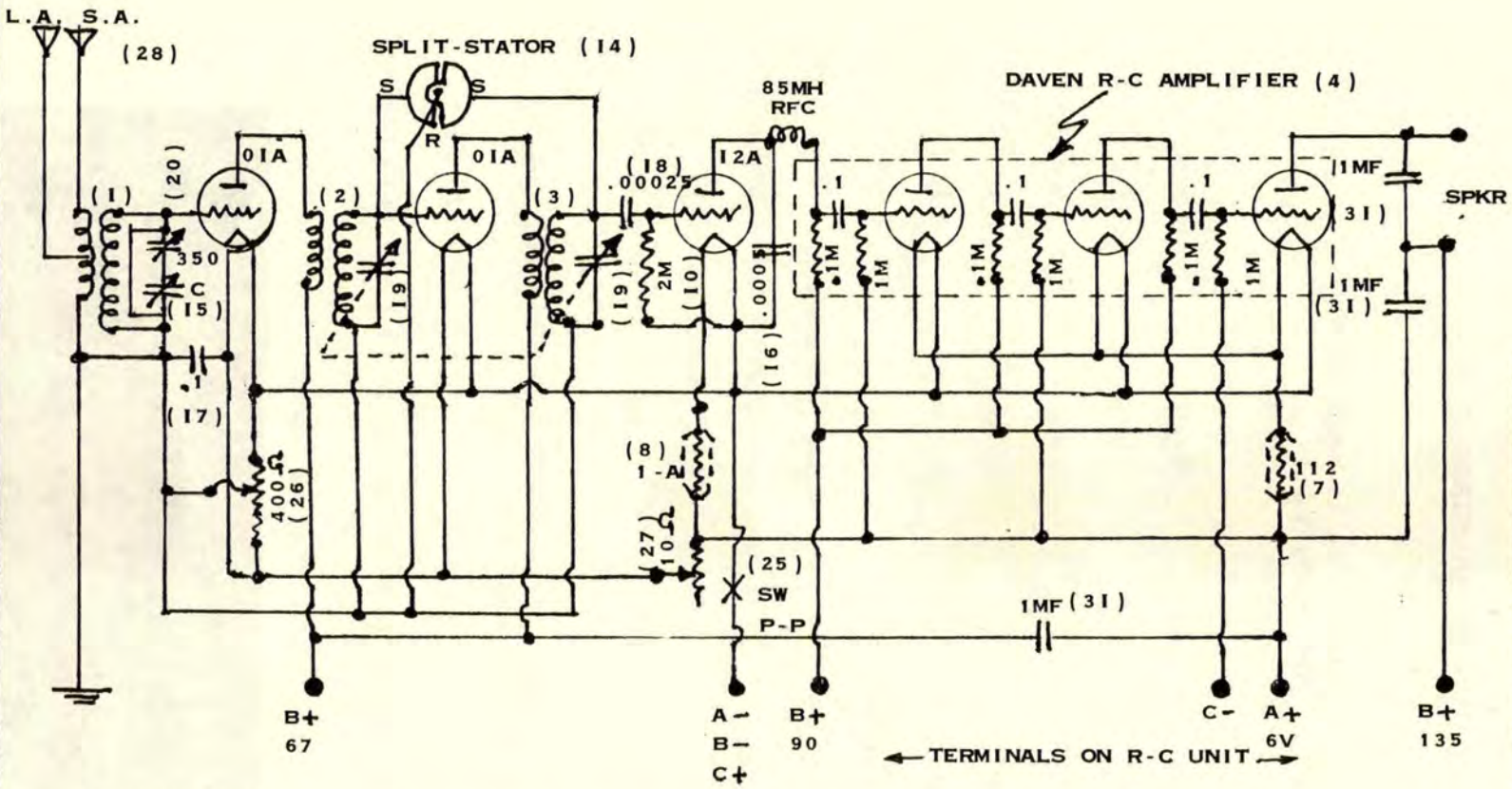

C = COMPENSATOR

C- BATTERY (24) 9V-10.5V ATTACHED TO R-C UNIT ONLY.
DO NOT ATTEMPT TO OPERATE THIS SET WITHOUT THE C- BATTERY!

NOTE: This improved version of the Daven Bass-Note receiver was the work of Geo. V. Rockey, designer of the original circuit, and Chief Engineer for Daven Radio Co. This version was offered as a complete set, and retailed for $160.

(RW 11-13-26)

IMPROVED DAVEN BASS-NOTE RECEIVER, 1926; Sht. 2

DAVEN HI-MU TUBES SPECS.

No rheostat or FIL resistance is required when using a 6-volt "A"-battery with DAVEN HI-MU tubes.

Characteristics:	MU-20	MU-6
FIL Voltage	5.5-6V	5.5-6V
FIL Current	¼ Amp.	½ Amp.
Plate Voltage	90-180V	90-180V
Plate Current	1.1 mA*	12-15 mA**
Amplifying Constant	20*	5-6
Mutual Conductance	500 Microhms	2K Microhms
Plate Impedance	40K Ohms*	3K Ohms
Base	UX	UX
Price (1926)	$4.00	$5.50

* = 60V on the plate, Zero volt on the grid, negative FIL, and no plate resistance.

** = 135V on plate, 10.5V C-.

All other characteristics based on 135V and grid to A-.

* * *

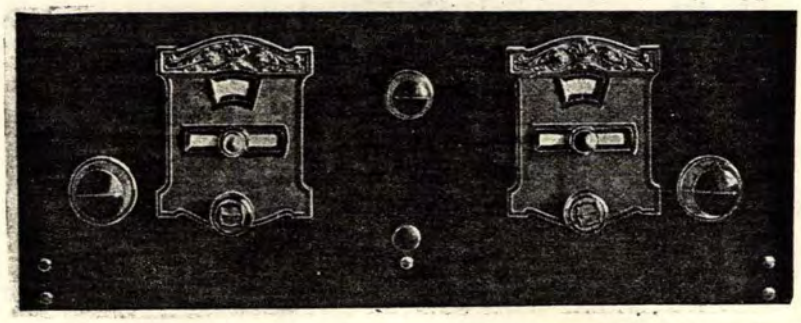

IMPROVED DAVEN BASS-NOTE RECEIVER, 1926: Sht.4

General Parts List

RF Transformers (3)	Daven	(1,2,3)
R-C Amplifier	Daven	(4)
Hi-Mu 20 or 40 Tubes (3)	Daven	
Power Tube MU-20	Daven	
Split-Stator Variable	Daven	(14)
01A's (2)	Ce-Co	
Dual Variables, 350mmf	United Scientific	(19)
Amperite 1-A & 112	Radiall	(9, 7)
Midget Variable, 25mmf	Daven	(15)
RFC Standard	Samson	(13)
Single Variable, 250mmf	United Scientific	(20)
Grid-Leak, 2M-ohms	Daven	(11)
Grid Condenser, .00025mf	Sangamo	(18)
Cl-Er-Tone Sockets (5)	Benjamin	
Filament Switch	Carter	
Potentiometer, 400-ohms	Carter	(26)
Rheostat, 10-ohms	Carter	(27) (21)
Vernier Dials (2)	Brooklyn Metal Stamping	
5-Wire Battery Cable	Belden	(34)
20' Buss-Wire	Acme	
Fixed Condensers:	Sangamo	
.1mf .006mf(2) .0005mf		(12,16,17)
1mf (3)		(31)
Coil Forms = 1½" Ø x 3" Lg. (3)	Daven	
Panel = 7" x 18", Bakelite		
Sub-Panel = 9.75" x 17.25" x .610"	Bakelite/Micarta	

NOTE: While other parts of like nature may be substituted, as with any of the early circuits offered the home-constructor, the Daven parts are essential to the Bass-Note circuit, and the BMS dials are essential for the authentic Daven Bass-Note look.

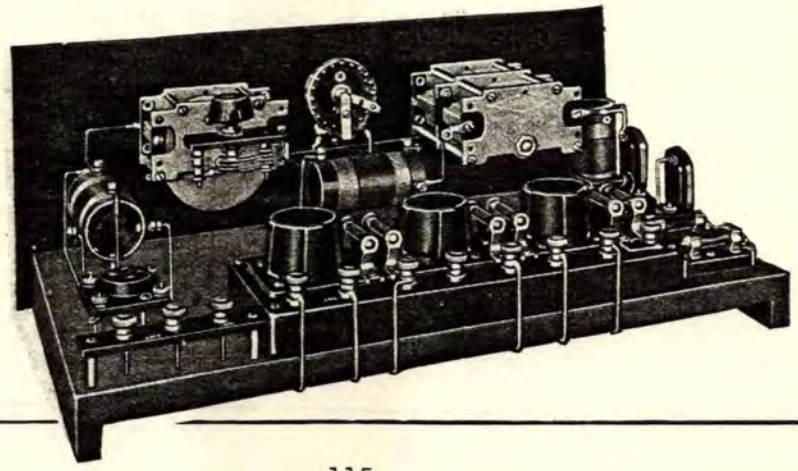

DAY-FAN 5-TUBE TRF, 1923; Sht. 1

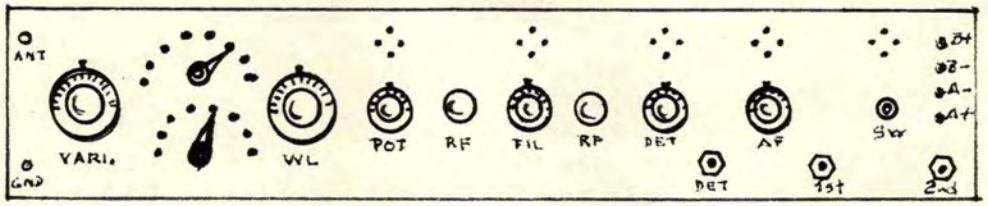

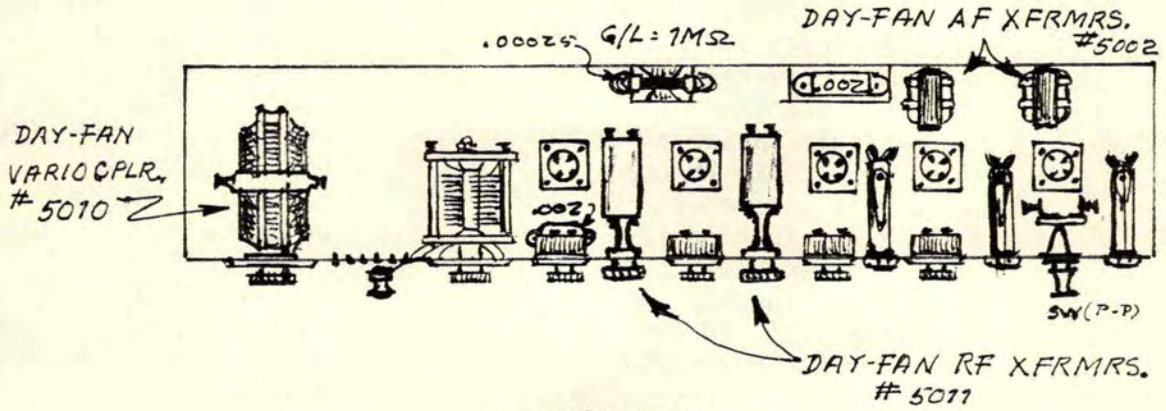

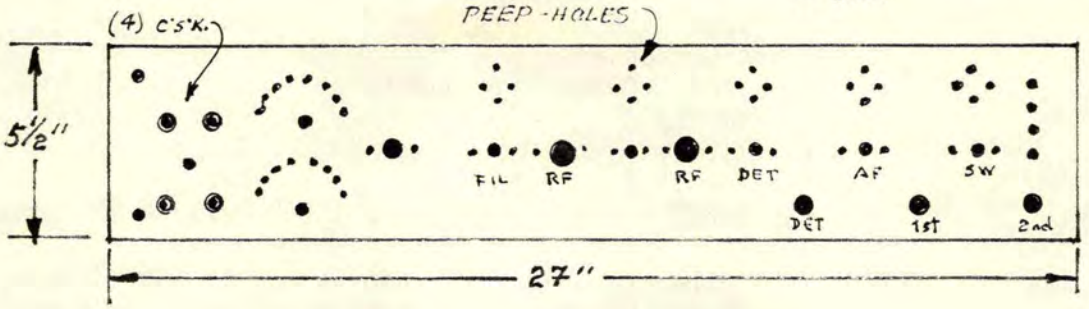

TUNING NOTES.

1. CONNECT SET AS SHOWN BY DIAGRAMS ON SHT. 2.
2. ADJUST FIL. CURRENT FOR TUBES USED.
3. SET VARIO-COUPLER IN VERTICAL POSITION.
4. SET WAVELENGTH CONTROL TO DESIRED FREQUENCY.
5. TUNE IN STATION WITH VARIABLE CONDENSER.
6. USE POT. TO CLEAR-UP SIGNAL.
7. FINE TUNE WITH VARIO-COUPLER ROTOR.

NOTE ODD SIZED PANEL.

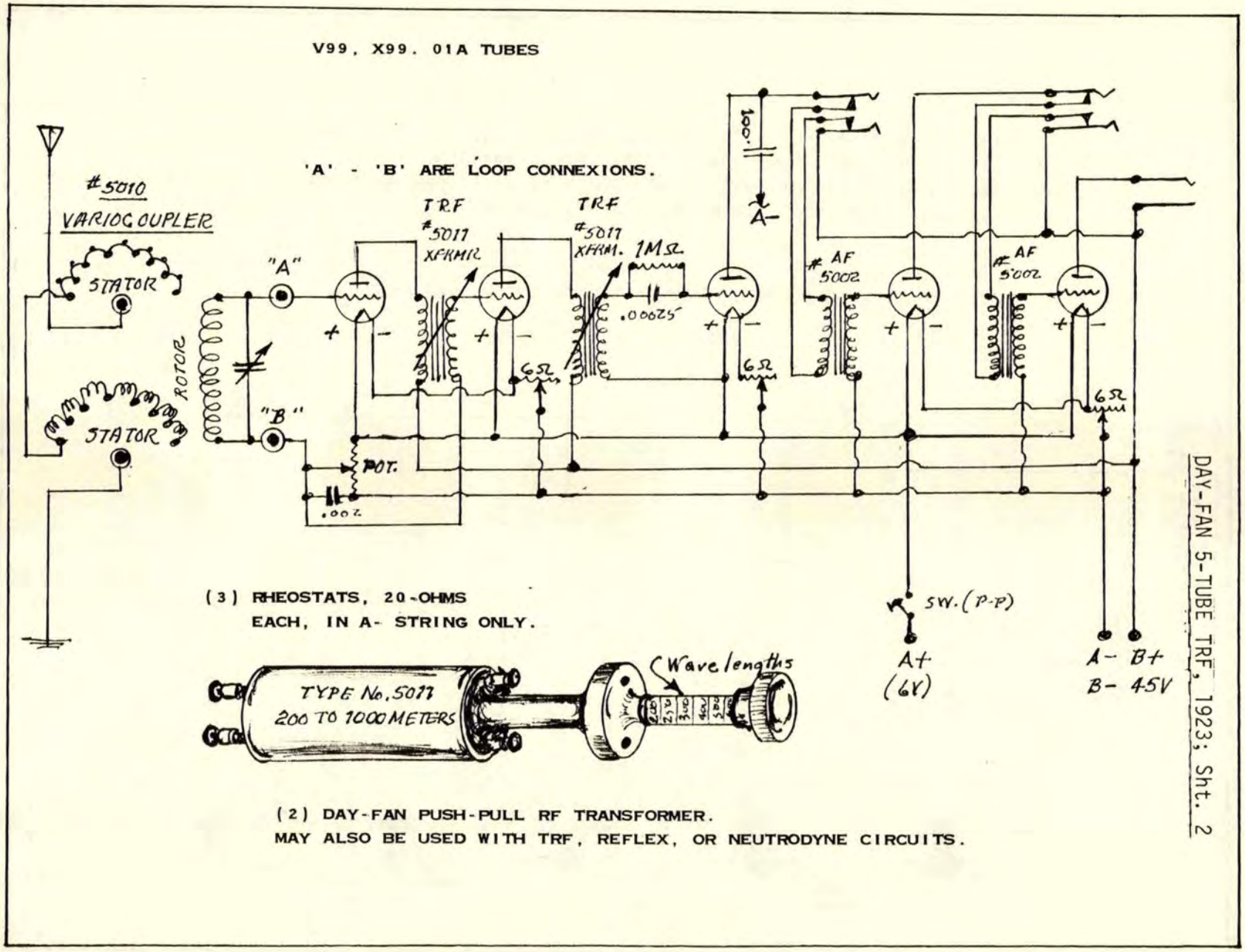

DAY-FAN 5-TUBE TRF, 1923; Sht. 2

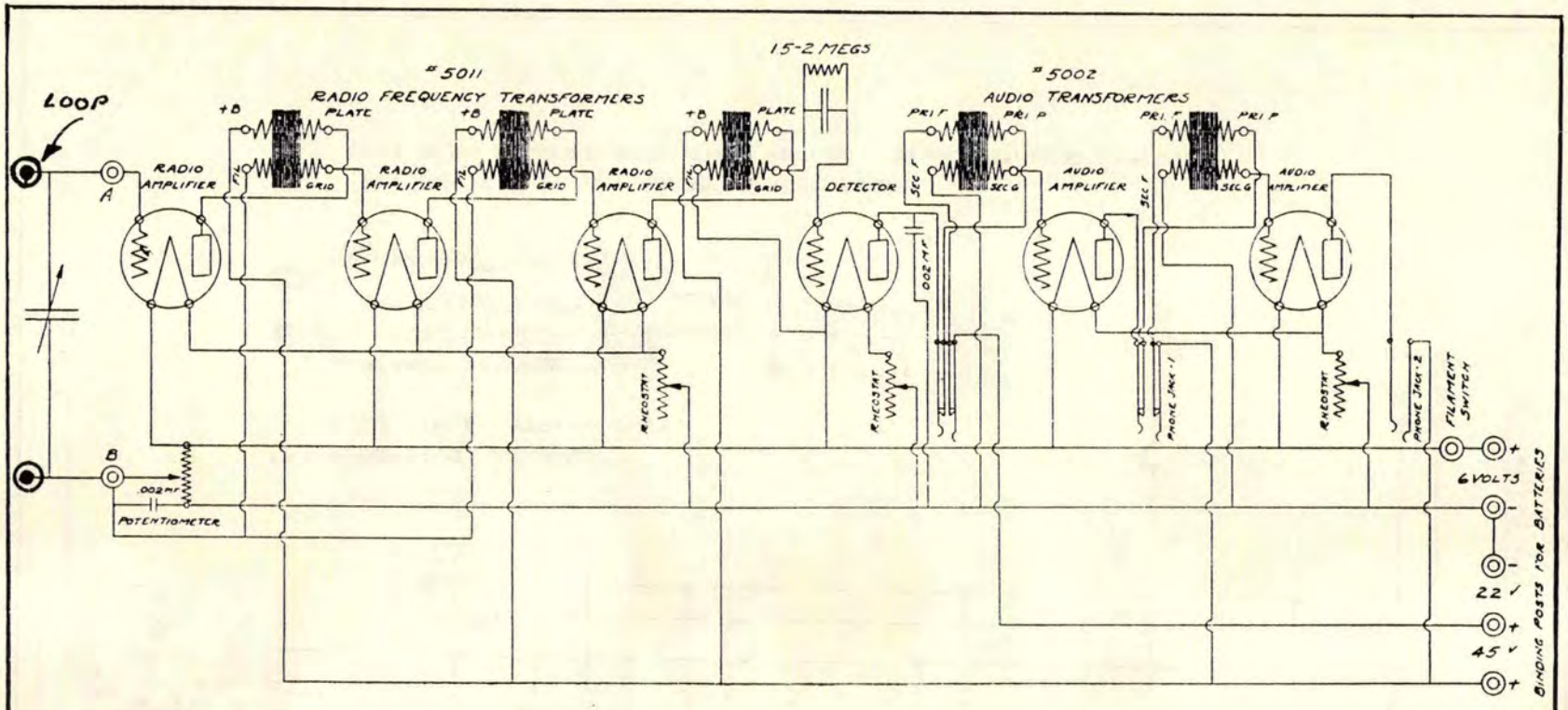

DAY-FAN RADIOFREQUENCY AMPLIFYING CIRCUIT Nº 11

This was DAY-FAN's original schematic for the loop-only version of their 5-tube Tuned Radio Frequency receiver. It is identical to the circuit that provided for use of a loop or long wire antenna, specified as 100' long. The "secret" of both versions lay in the push-pull RF transformers, which, when they worked, were quite accurate.

EAGLE 5-TUBE NEUTRODYNE, 1926

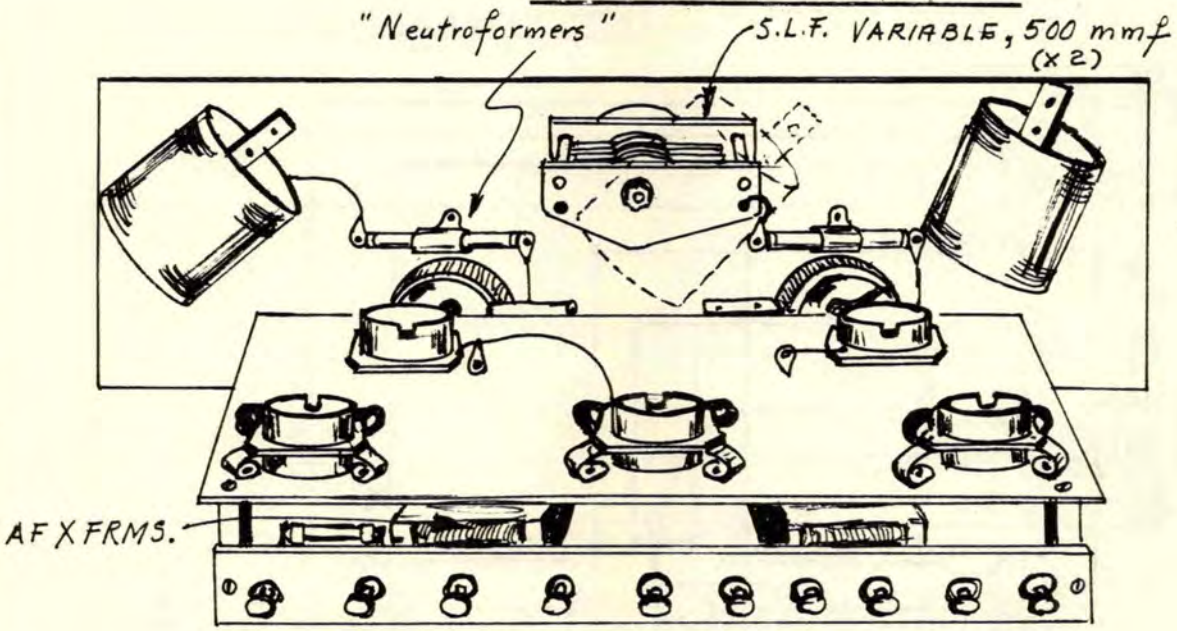

AN OBLIQUE REAR VIEW

Centre Coil Shown Dotted; Mounted This Side of Variable.

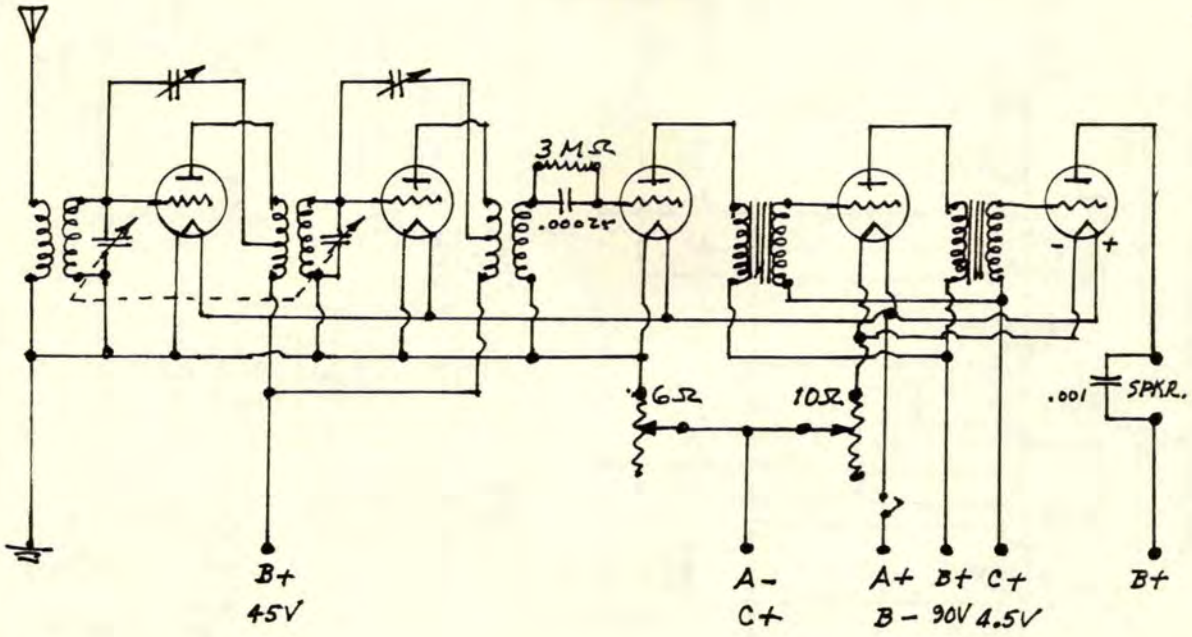

(CB Spr.-26)

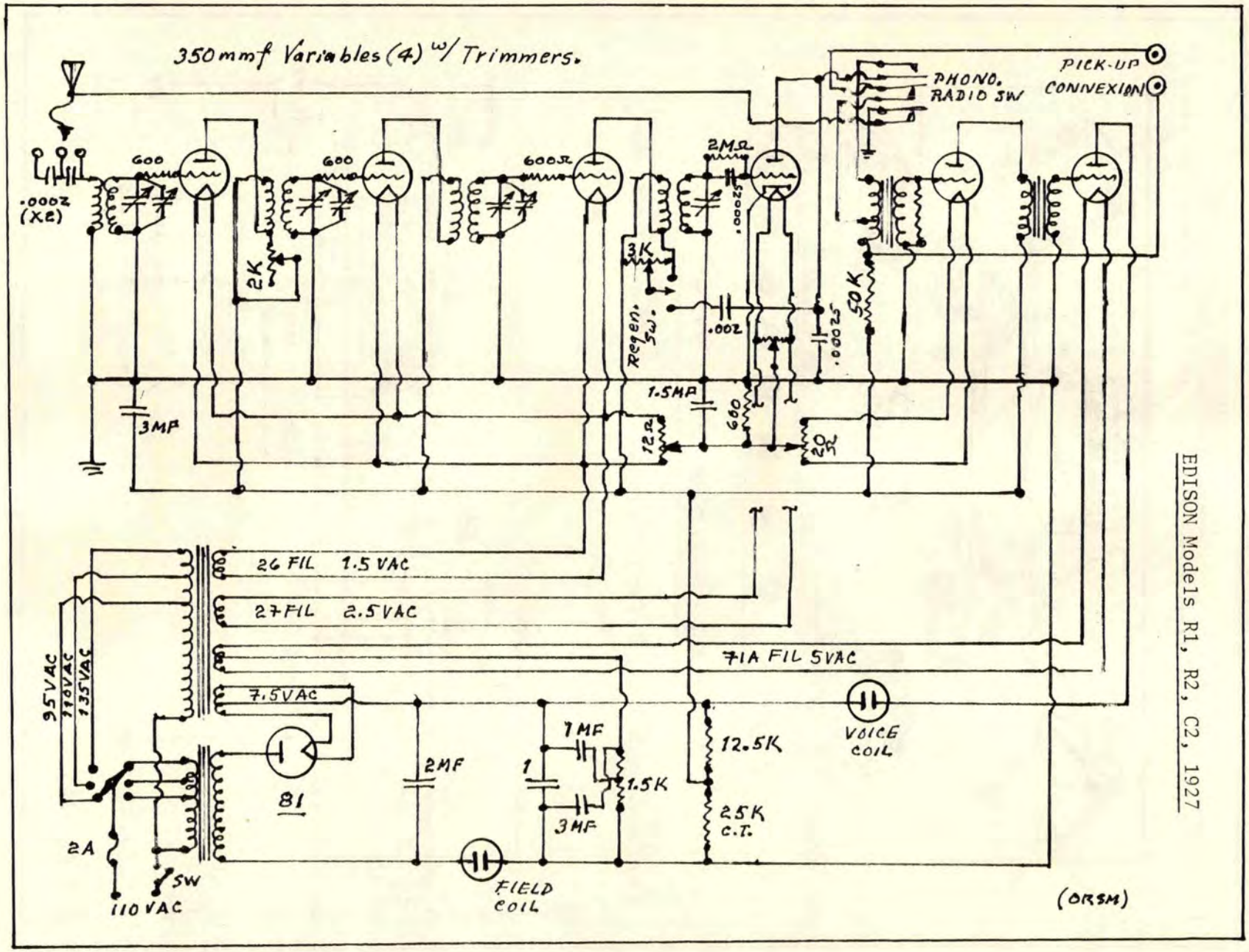

EDISON Models R1, R2, C2, 1927

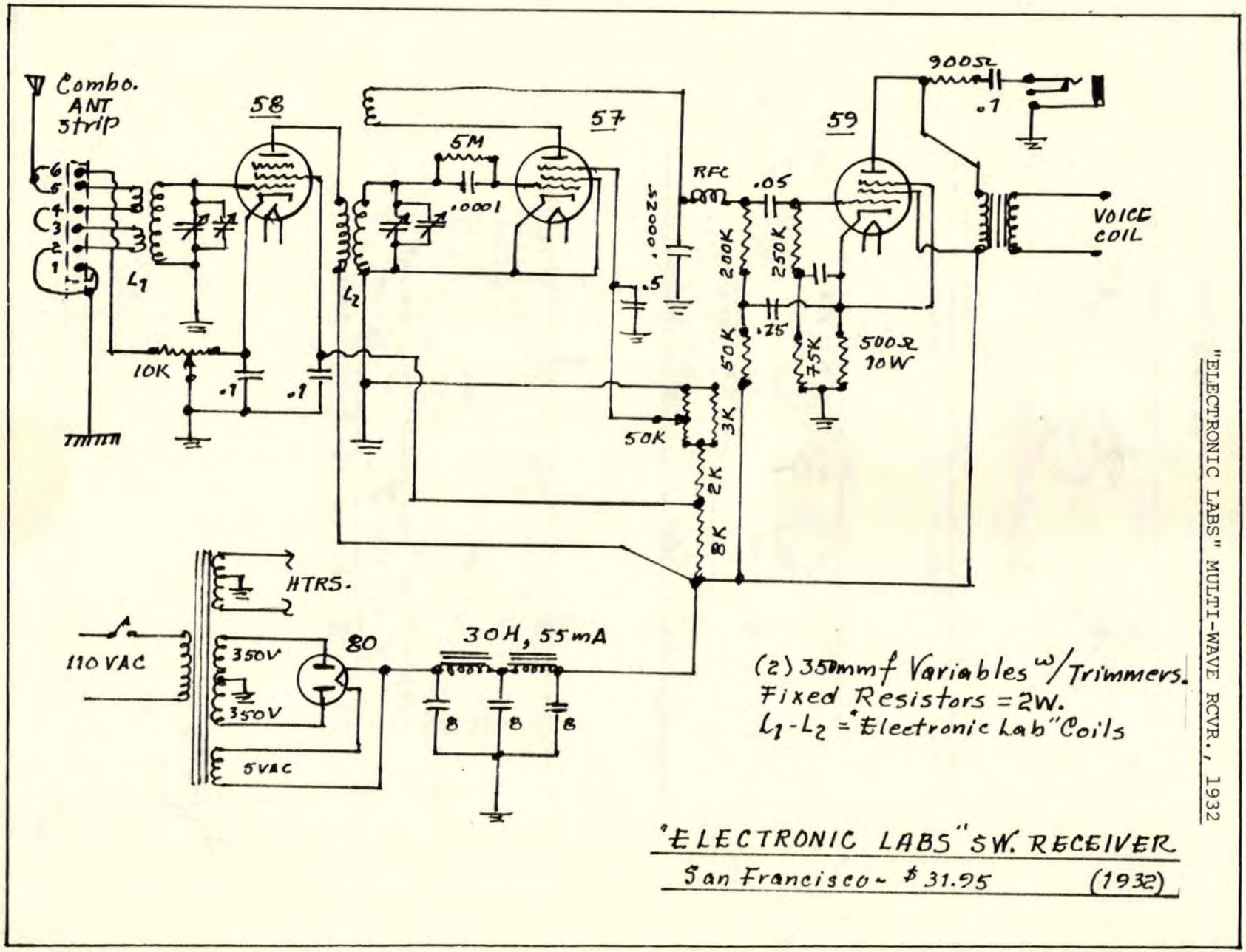

"ELECTRONIC LABS" SW. RECEIVER

San Francisco ~ $31.95 (1932)

"ELECTRONIC LABS" MULTI-WAVE RCVR., 1932

"ELECTRON" Model VIII - F&M, 1926

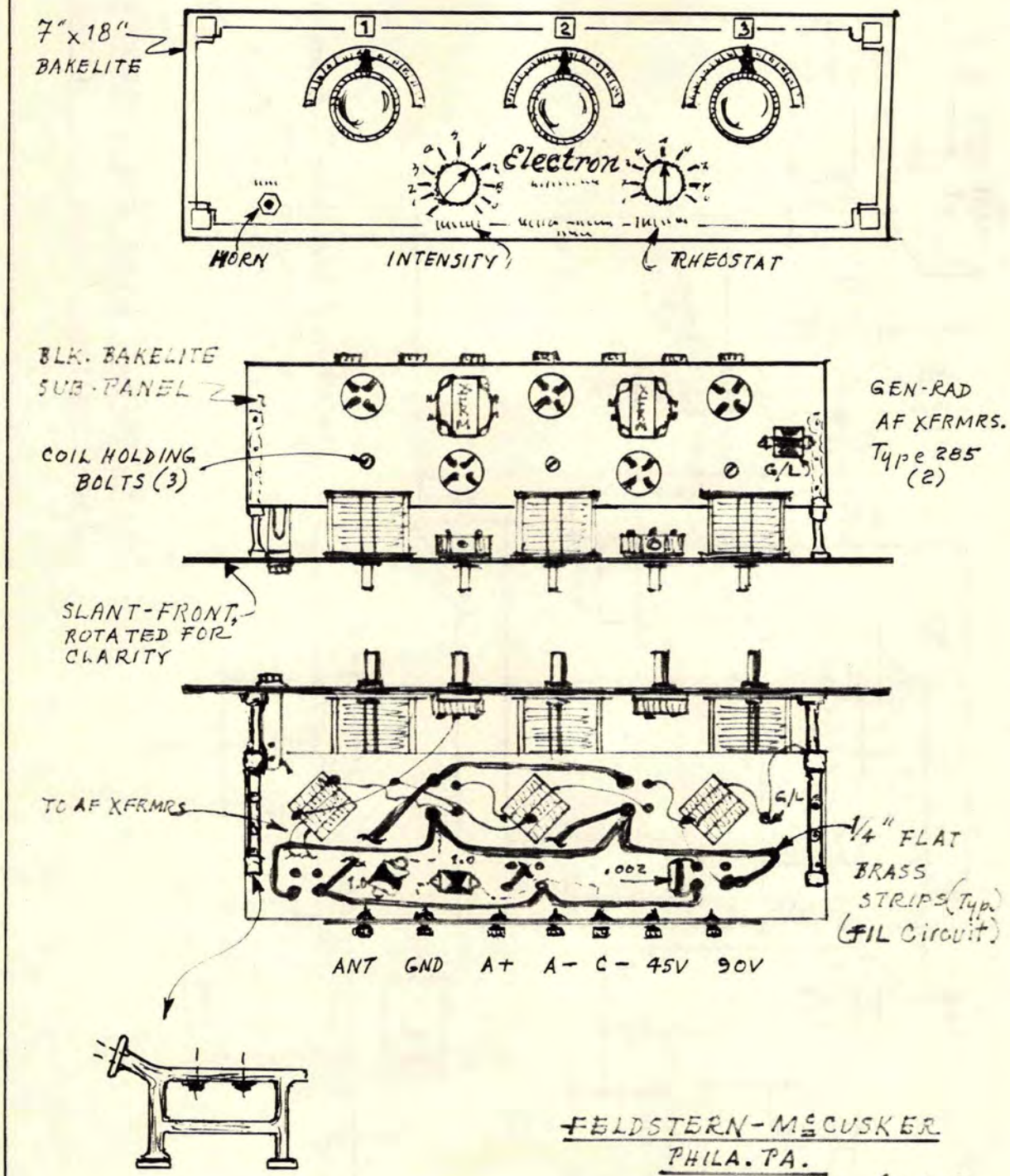

Pot-Metal Sub-Panel Brackets (2)

FELDSTERN-McCUSKER
PHILA. PA.
(1926)

Model VIII - TRF

"ELKAY" SYNCHRONISED T.R.F., 1926: Sht. 1

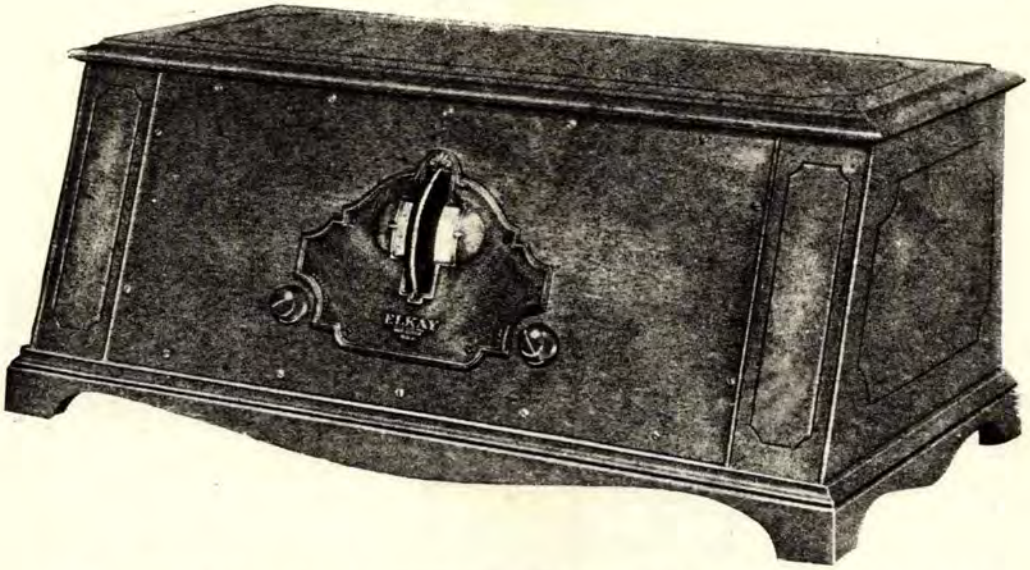

The "ELKAY" receiver was the product of the Langbein-Kaufman Radio Company of New Haven, Connecticut, and was the second commercial manufacturer to incorporate the then-new Donle "Truphonic" amplifier system (Welty and Na-Ald were the first). Full details of the Donle "Truphonic" unit are shown in Volume IV: here, it is only necessary to know how it was hooked-up in the "ELKAY" receiver.

L&K also offered their version of an Amperite, which they called Elkay Tube Equalisors. The function was the same as Amperite's, but the L&K units were twice as "fat" and not quite as long, thus requiring the L&K mount, which was sold for $1, with Equalisor.

You will note also that the Na-Ald three-gang variable condenser unit was employed, which they called "Uni-Contol", and which Na-Ald called "Localised Control". While the variables were ganged, in that they all were in line, each was controlled by a seperate rubber-edged drum-dial which you can see on the front panel.

Donle was the inventor of the Sodion tube, as well as other useful items, and for L&K his S-7 tube was employed, which was a modification of the original S-tube. However, 01A's will serve just as well, with a 200A as the DET and a 71A in the last audio stage. The "Elkay Suppressor" was essentially a 700-ohm fixed resistor.

The "Elkay" was offered in a 5-tube and 6-tube version: the 6-tube version is sketched herein, the difference being that the 5-tube version had only one stage of RF. The sets sold for $125 and $80, respectively, with the usual increase in price "west of the Rockies".

"ELKAY" SYNCHRONISED T.R.F., 1926: Sht. 2

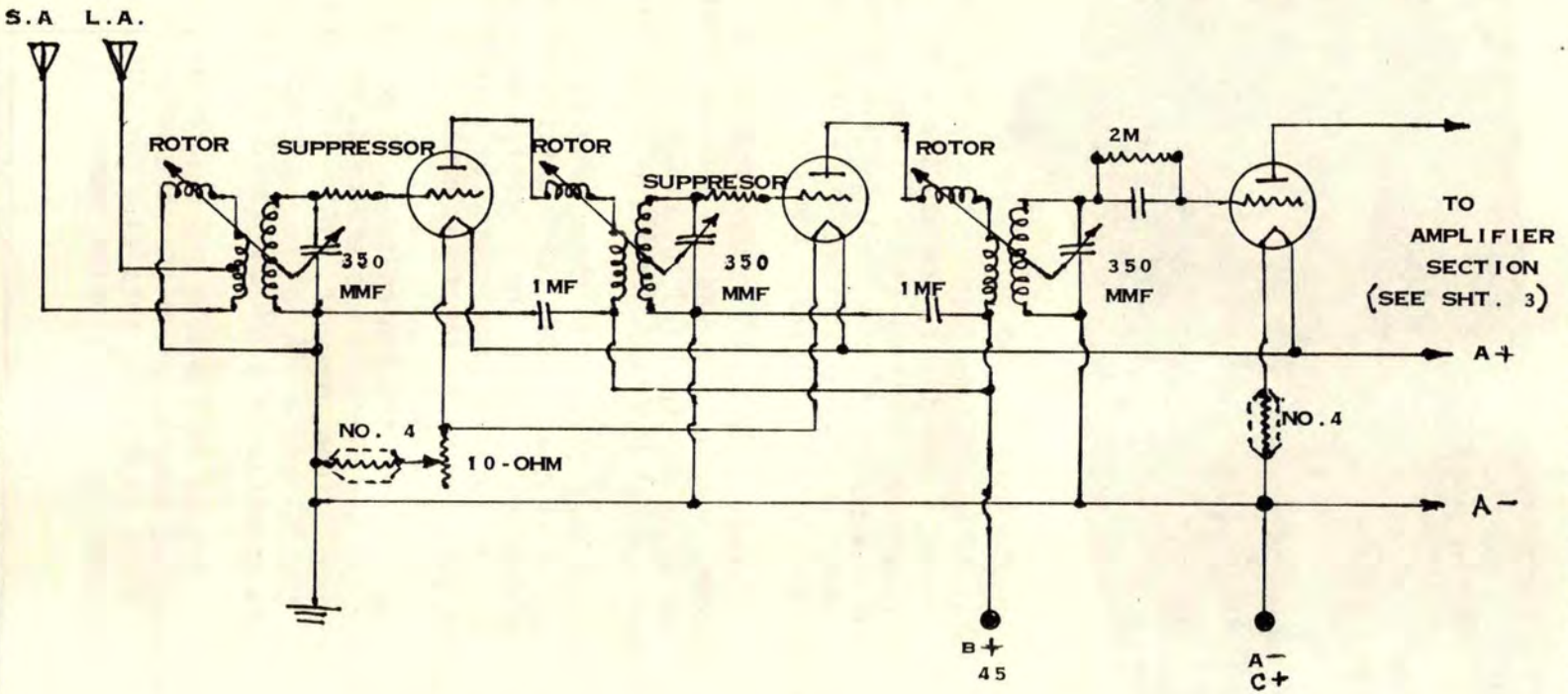

The RF section was of modular construction, each stage containing a spring-socket, suppressor, and grid-leak (3).

The three coils shown were "Elkay Syn-Auto" coils, which were conventional for the time, with the obvious exception that the normal Tickler was in the PRI winding leg and connected by a shaft to the variable condenser.

"ELKAY" SYNCHRONISED T.R.F., 1926: Sht. 3

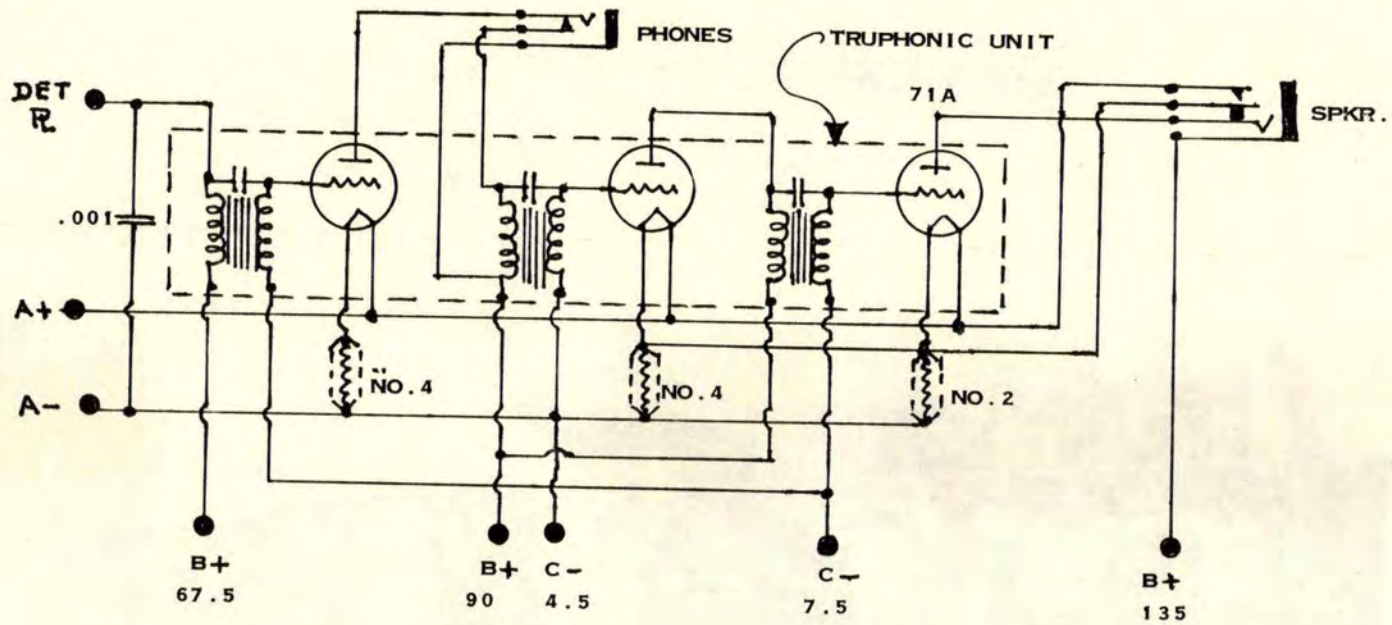

NOTE : L&K NUMBER 2 AND 4 EQUALIZER ARE THE SAME AS AMPERITE 112 AND 1-A.

THE DAVEN MU-6 MAY BE SUBSTITUTED FOR THE 71A.

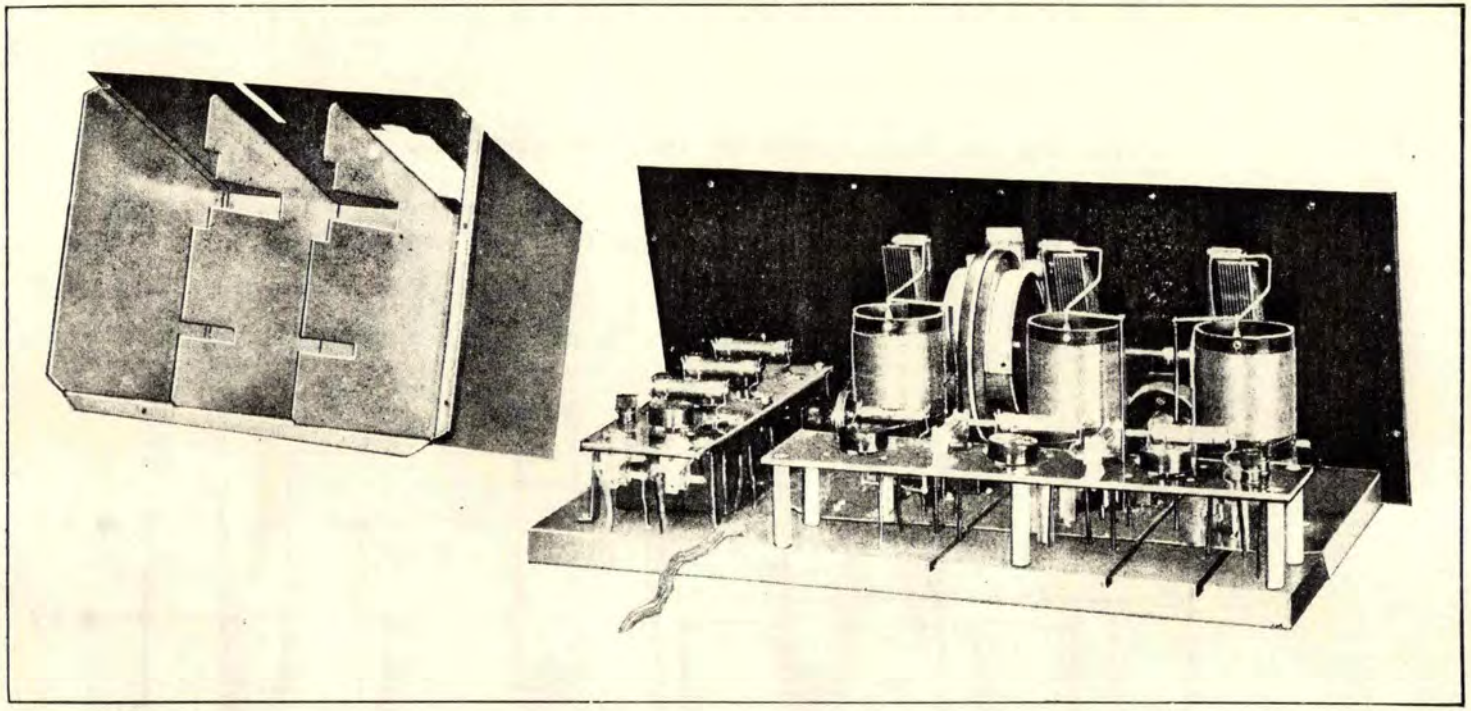

REAR VIEW OF THE "ELKAY" 6-TUBE RECEIVER

Shielding is removed and shown at the left; the "Truphonic unit is seen at the left end of the baseboard, which would also be covered by the shielding assembly.

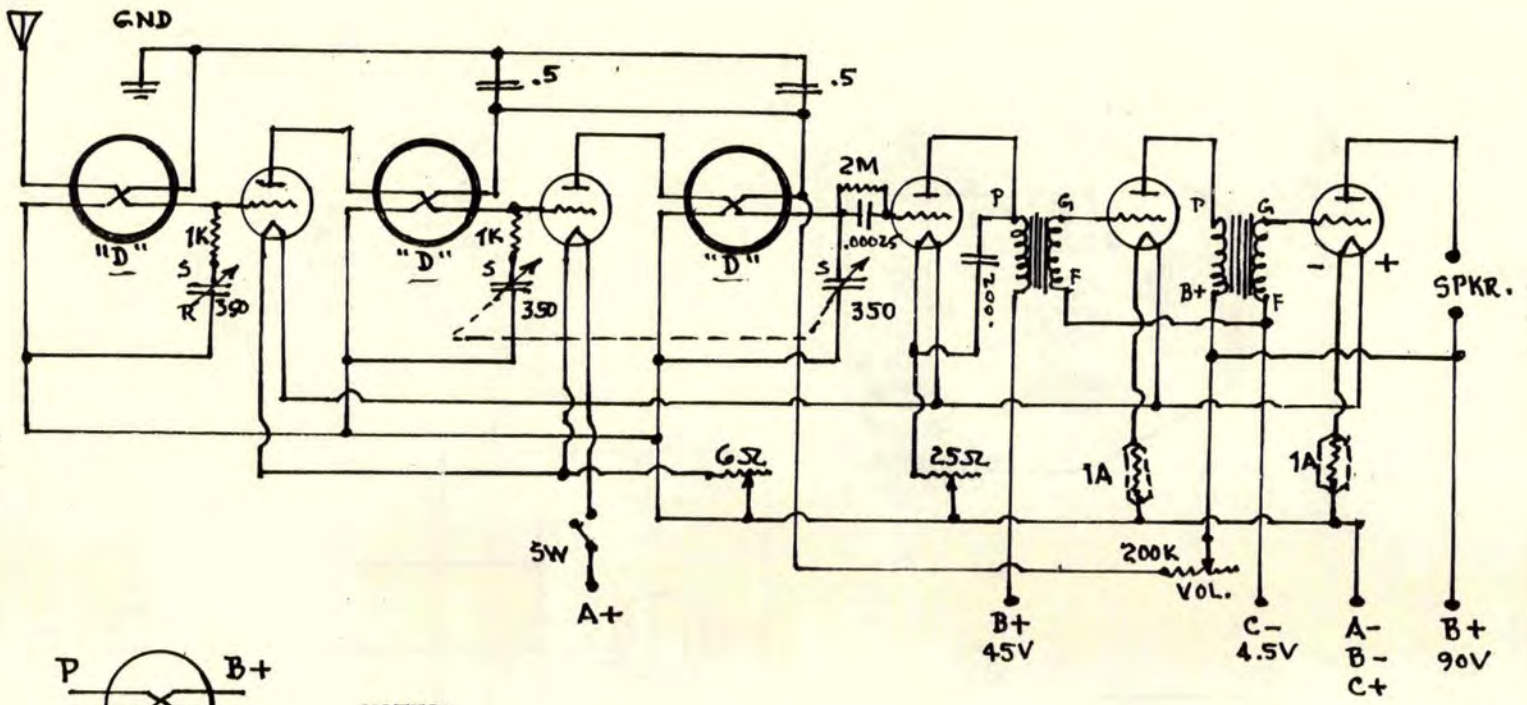

ELLIS D-COIL FIVE REFLEX, 1927

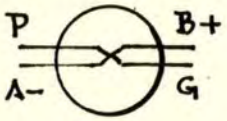

TYP. CONN. OF "D" COILS

NOTES:

(2) HALLDORSON "OVERTONE" AF XFRMRS.
HALLDORSON OUTPUT XFRMR. OPTIONAL.
7-CONTACT HAGEL POWER PLUG.
ALL TUBES 01A.
PANEL 7" X 21".
BASEBOARD 9" X 20".

MOUNT D-DOILS LAST!

PLATE VOLTAGE IS CRITICAL AT 90V. IF 90V CANNOT BE MAINTAINED, REPLACE 1K GRID RESISTORS WITH 750-OHM RESISTORS.

(RW 2-18-28)

AN ENGLISH ONE-TUBE SW RECEIVER of 1927

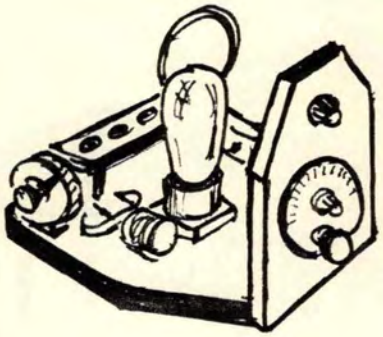

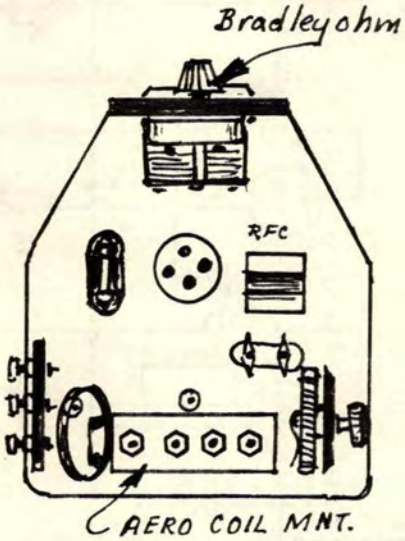

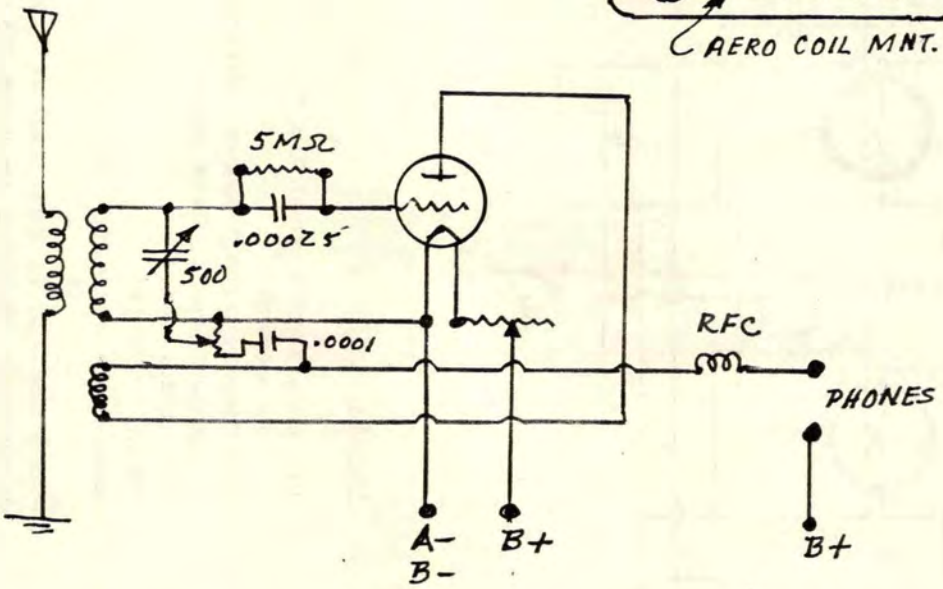

AERO SW. KIT
15-330 Meters

ERLA "CIRCULOID" 5-TUBE TRF, 1926; Sht. 1

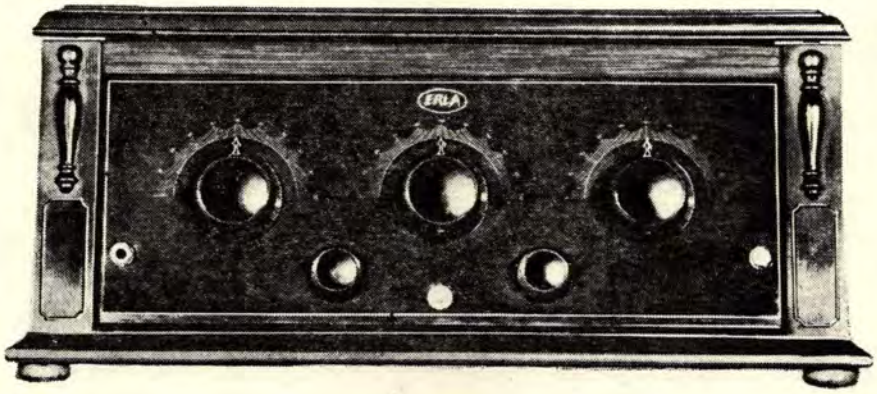

The "doughnut" coil enjoyed a brief popularity during the middle Twenties, and were offered by Cardwell, Rauland, Thor, Bremer-Tully, Erla, and such. This was the time of the "low-loss" fad, and each manufacturer claimed to have the coil with the least amount of loss. In actuality, they were all pretty much the same, with the exception of the Bremer-Tully coils, which seemed to be superior.

Erla employed their "doughnut" coils in several circuits, all following the same concept, and a few of their circuits are detailed on the following pages. All are simple and are easily constructed. With the exception of the ERLA "doughnut" coils, other comonents of comparable manufacture may be substituted with impunity.

* * *

ERLA "SUPERFLEX" 5-TUBE REFLEX, 1926; Sht. 2

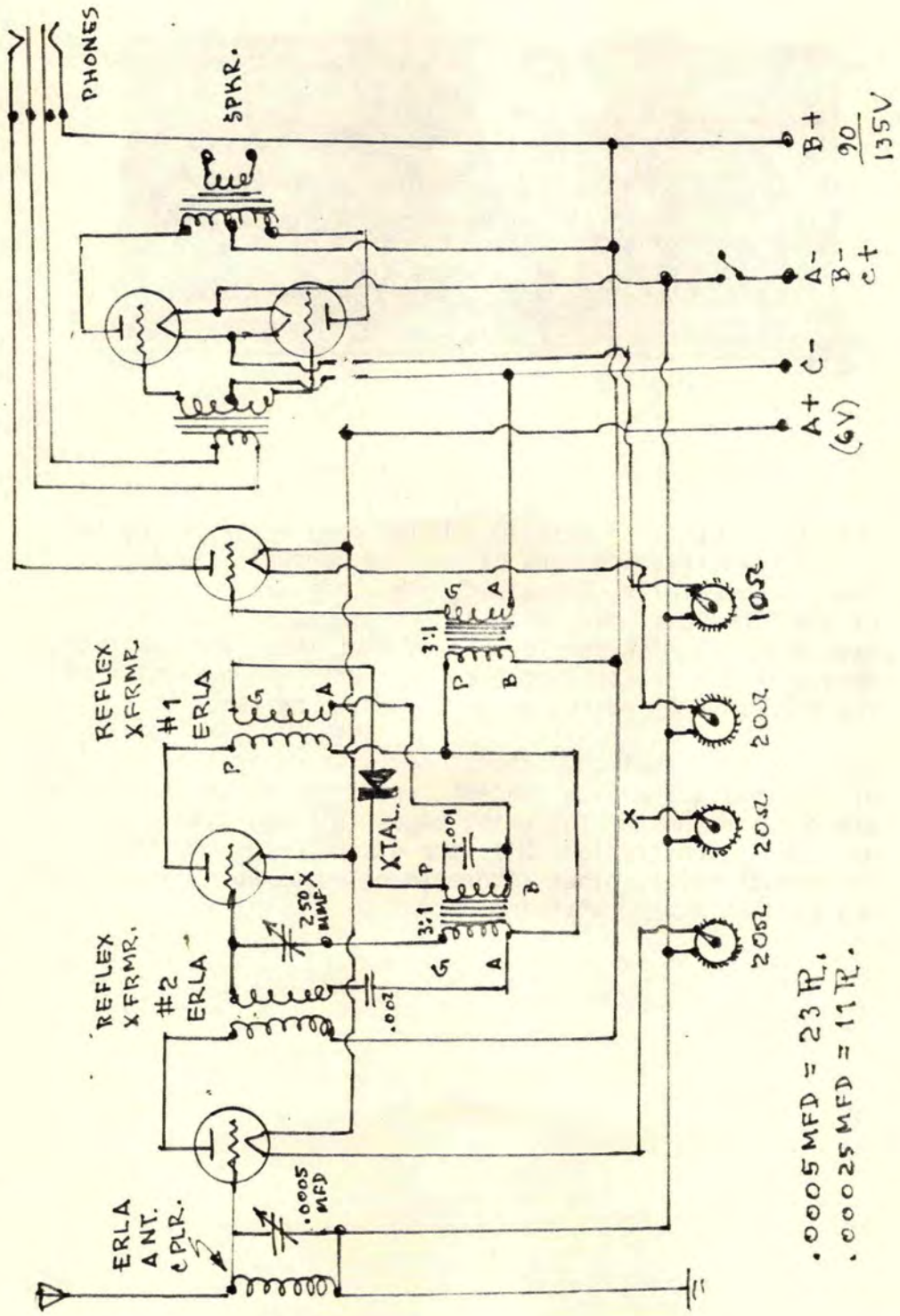

ERLA "SUPERFLEX" 5-TUBE REFLEX, 1926; Sht. 1

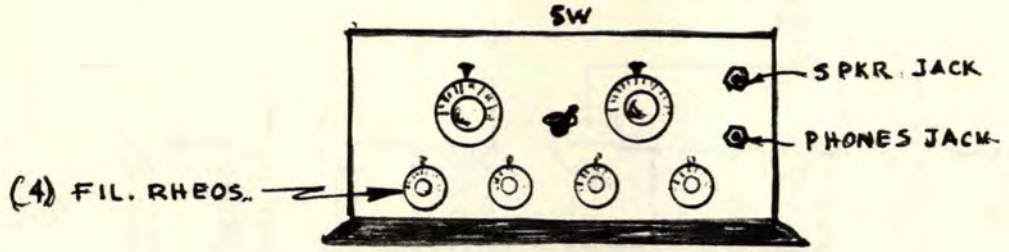

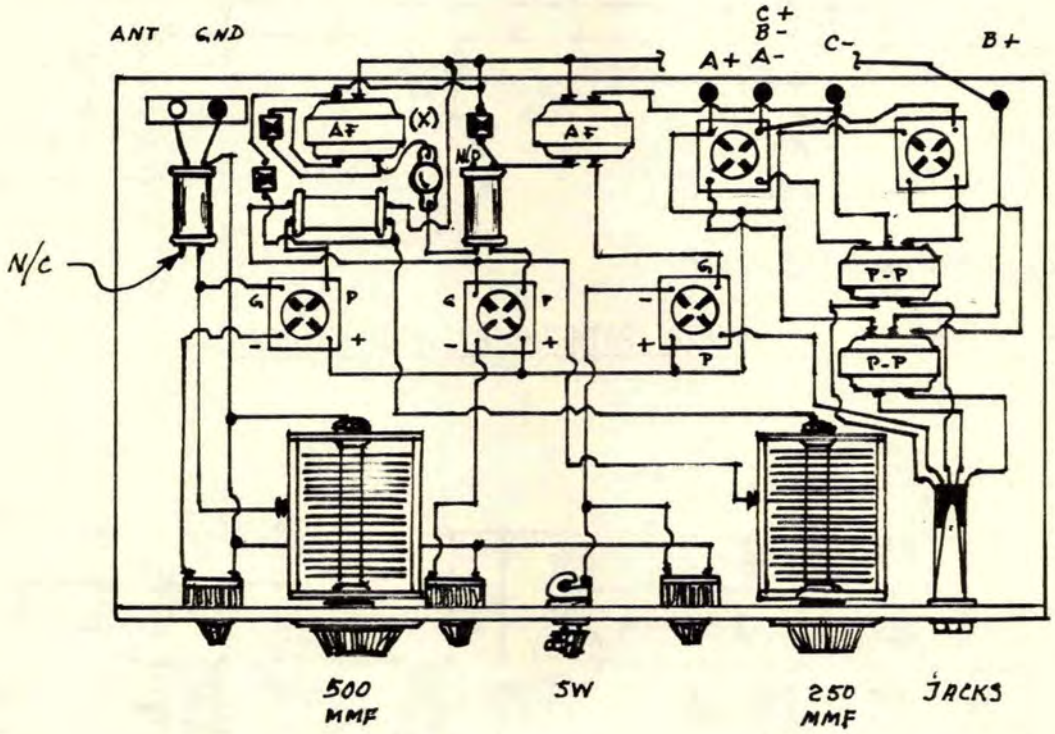

(X) = Crystal Detector. →

Refer to Sht. 2 for conventional schematic.

ERLA "PATHFINDER" ORIGINAL CIRCUIT, 1925

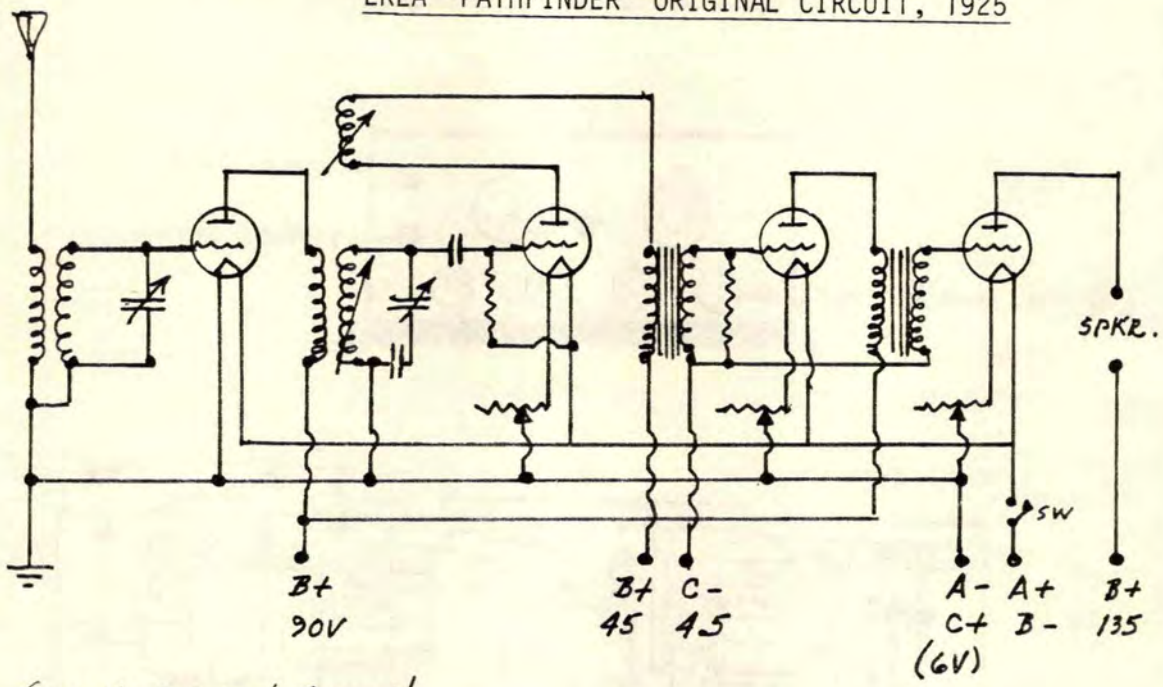

(1924) Original Circuit.

ERLA "PATHFINDER" VARIANT, 1925

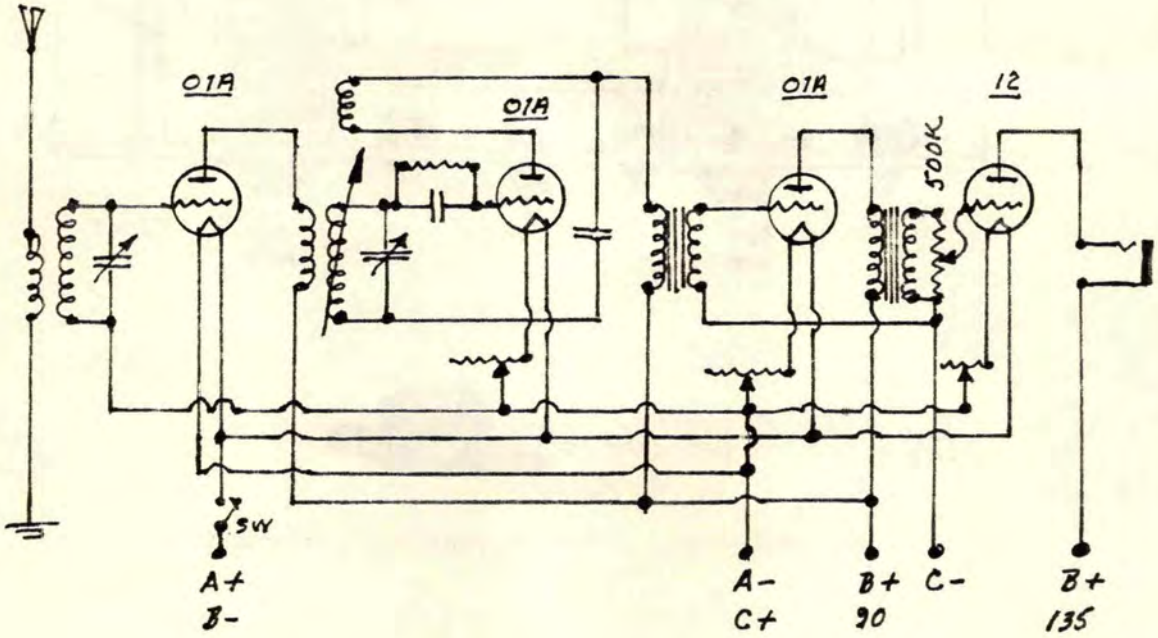

ERLA "PATHFINDER" TOROIDAL COIL TRF, 1925

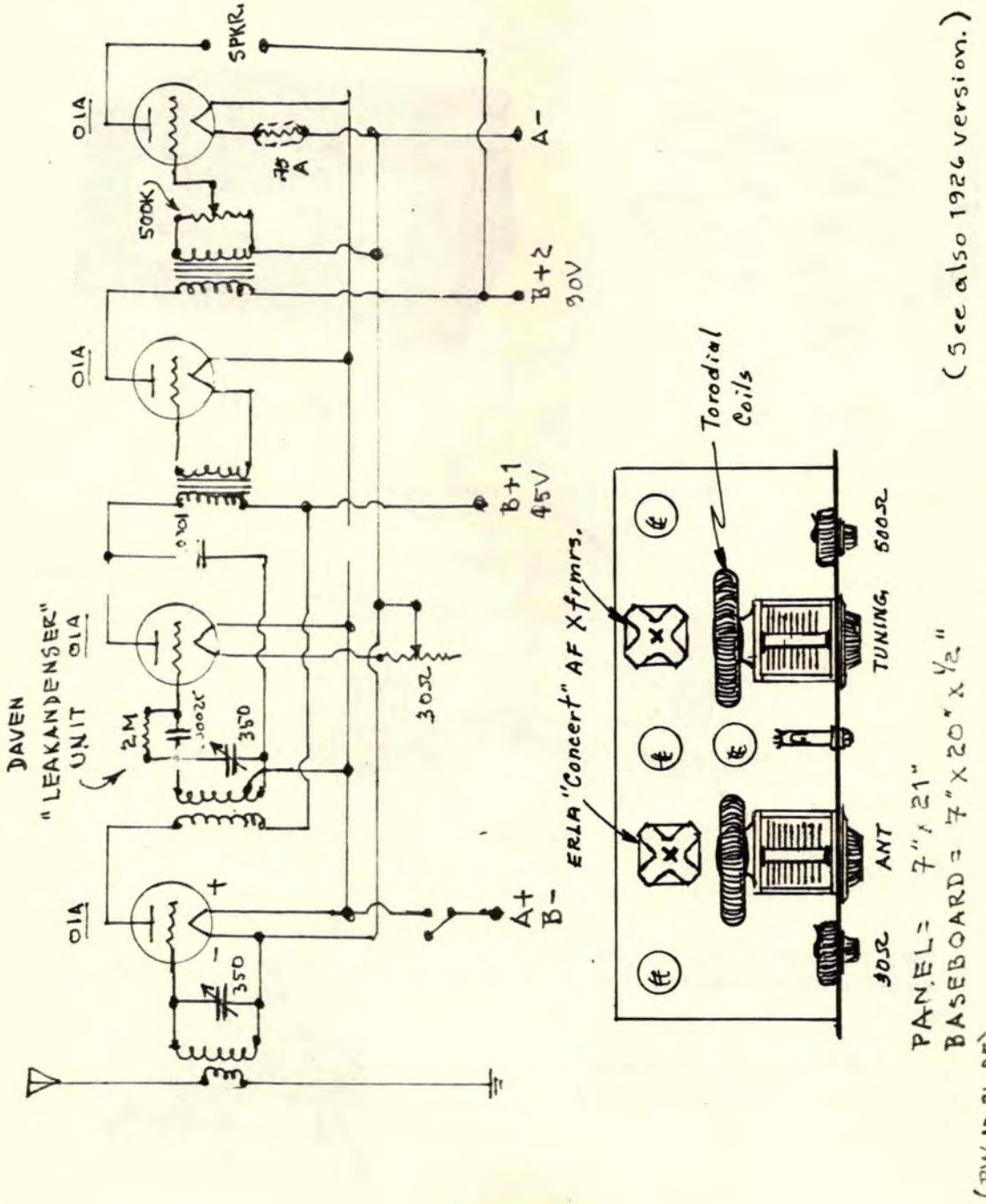

ERLA "MONODIC" NEUTRODYNE, 1927
(Licensed From H-F-L.)

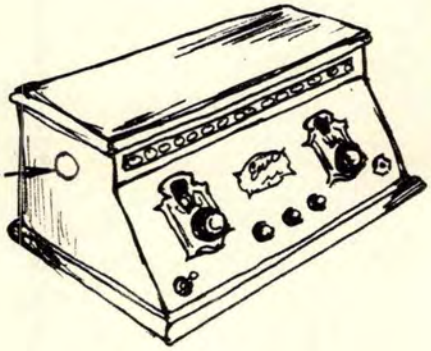

MODEL S-50

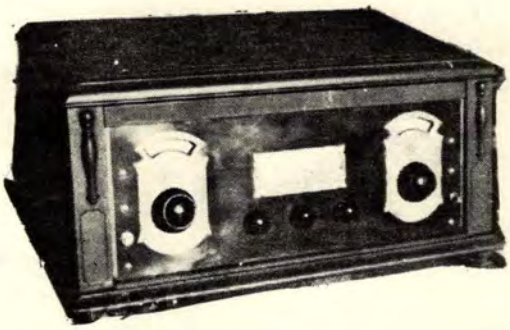

MODEL S-51

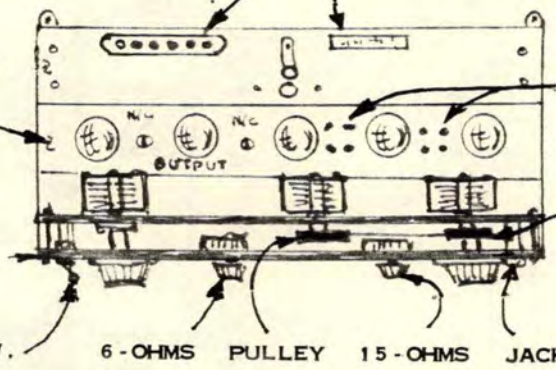

2-GANG VARIABLES DRIVEN BY A BRASS STRAP RIVETTED TO PULLEYS.

SETS WERE OFFERED COMPLETE WITH LOOP, TUBES, & SPEAKER FOR $55.

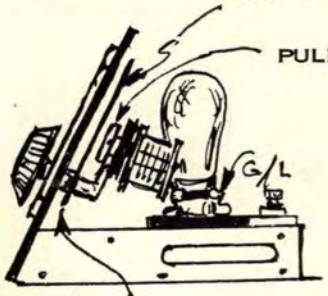

FRICTION DRIVE

"EVERYMAN FOUR TRF" 1927 - Designed by
E. Bunting Moore; sold by Radio Kit Co.; Sht. 1

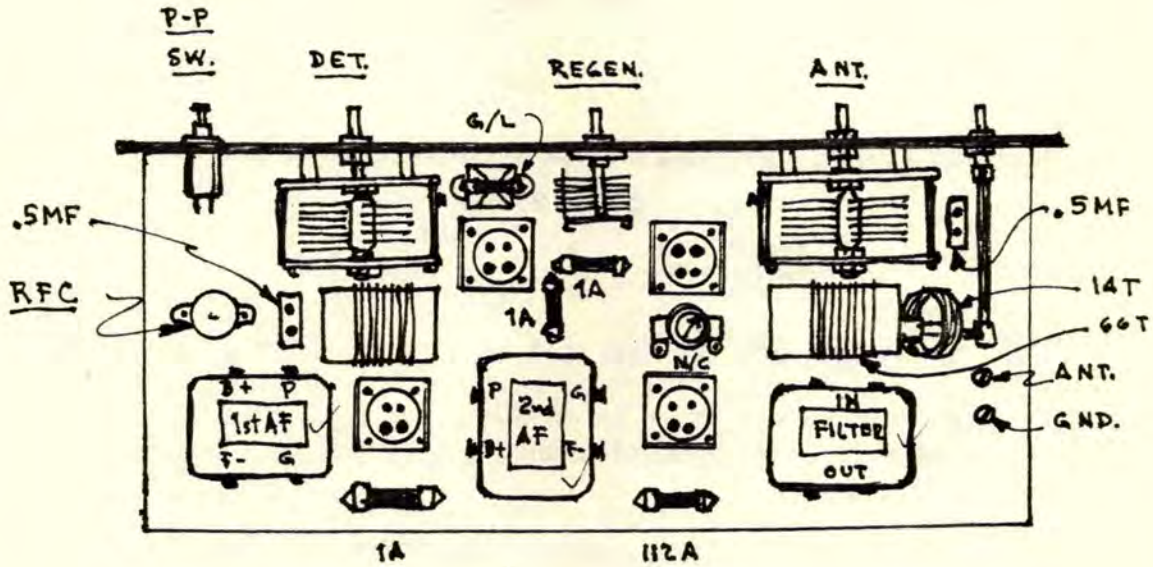

(RW 12-6/12-10-27)
(RW 3-10-28)

"EVERYMAN FOUR", 1927; Sht. 2

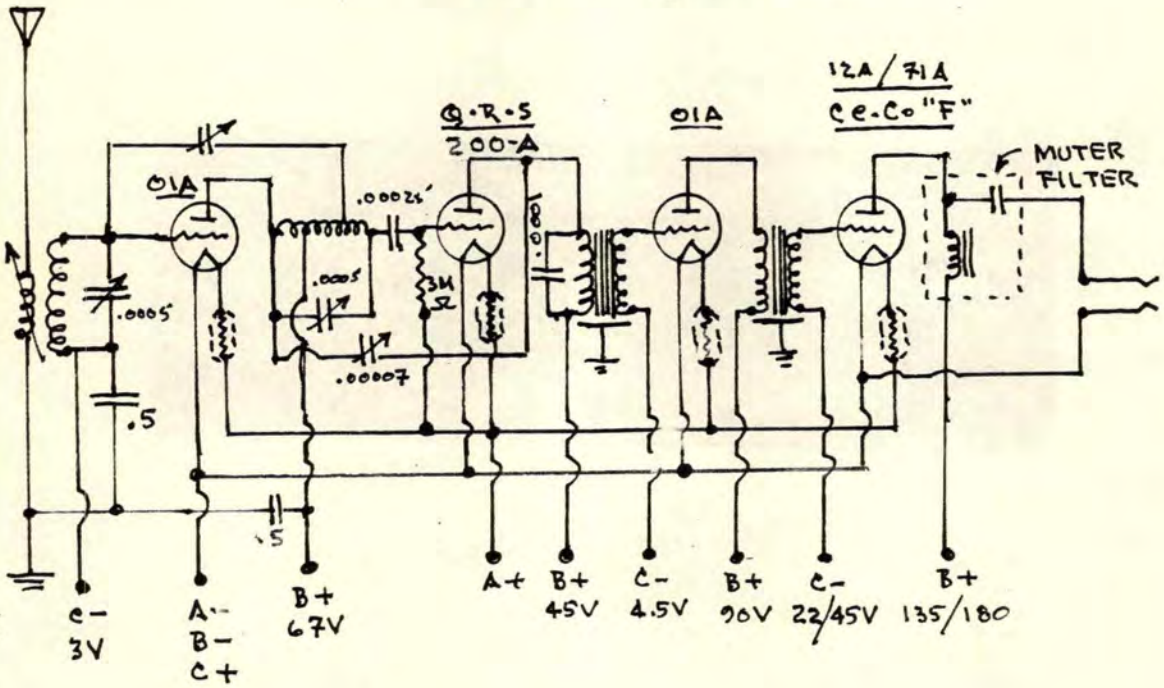

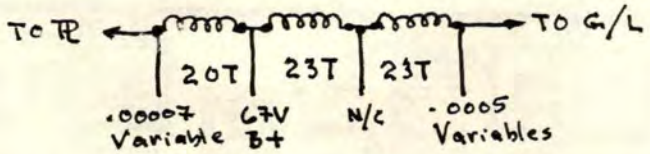

ANT COIL = PRI 14T; SEC 60T; #24 DSC; 2" Ø Coil Forms

RF COIL = 66T, Tapt at 20 & 43; #24 DSC.
(Maintain a minimum clearance all around of 1"; ~2" better.)

Ground the AF xfrmrs. with a lug under one foot.
Face RF socket away from the others.
Twin coupler coils and rod.
(2) Cardwell #192-E Variable.
Cardwell #613-A Variable Condenser.
(2) Mar-Co dials.
Muter "Claifier" (impedance AF filter).
Panel = 7" x 21" x 3/16".
Baseboard = 10" x 20" x 5/8".

FADA "SPECIAL FIVE" Model 265, 1928: $95

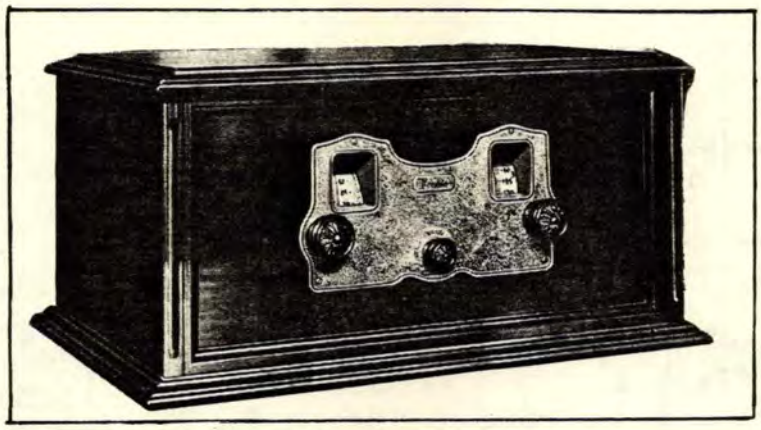

5-Tube Neutrodyne; (3) Stage RF; DET; (1) Stage AF.
Individual stages were shielded.

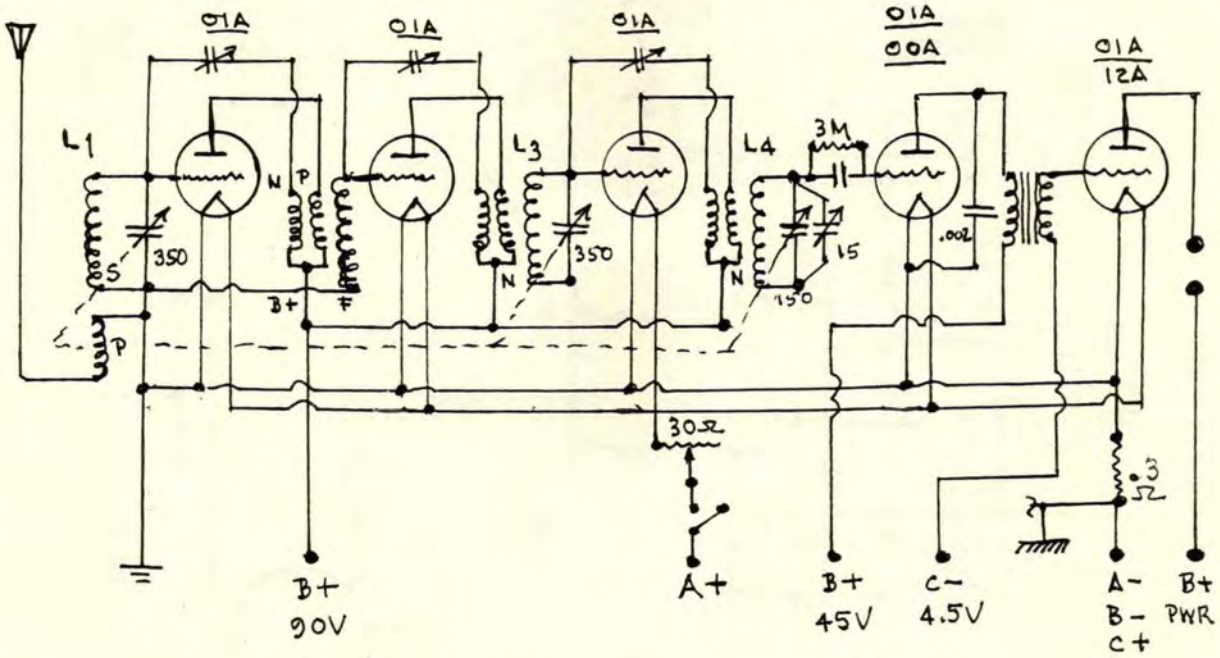

FIL rheostat & ON-OFF switch combined.
All RF coils are shielded; L2 is untuned.

Adjust on a wavelength between 250 and 300 meters, after balancing with a tube having an open filement.

FADA Model 170-A NEUTRODYNE, 1925

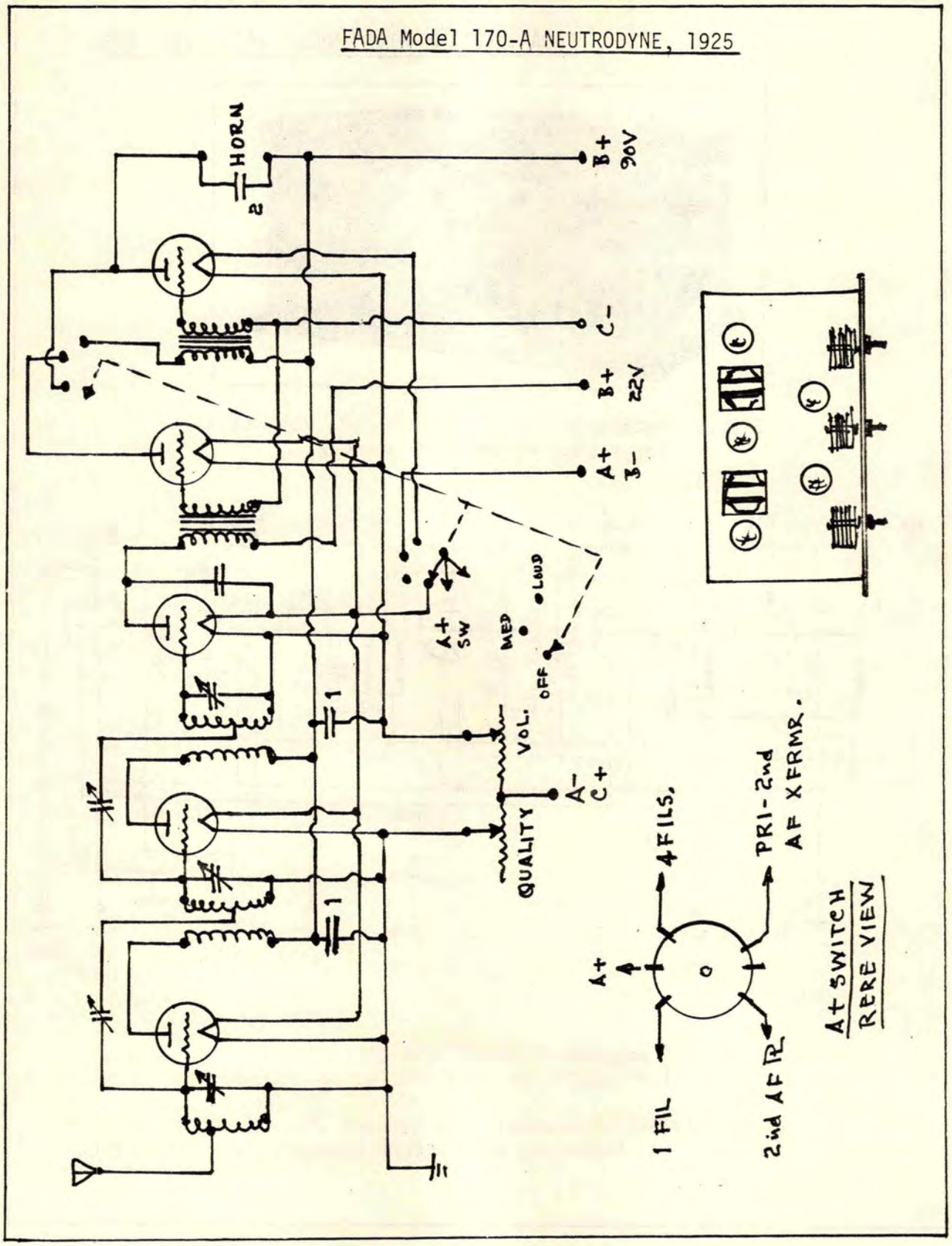

FEDERAL Type 59 RECEIVER, 1926

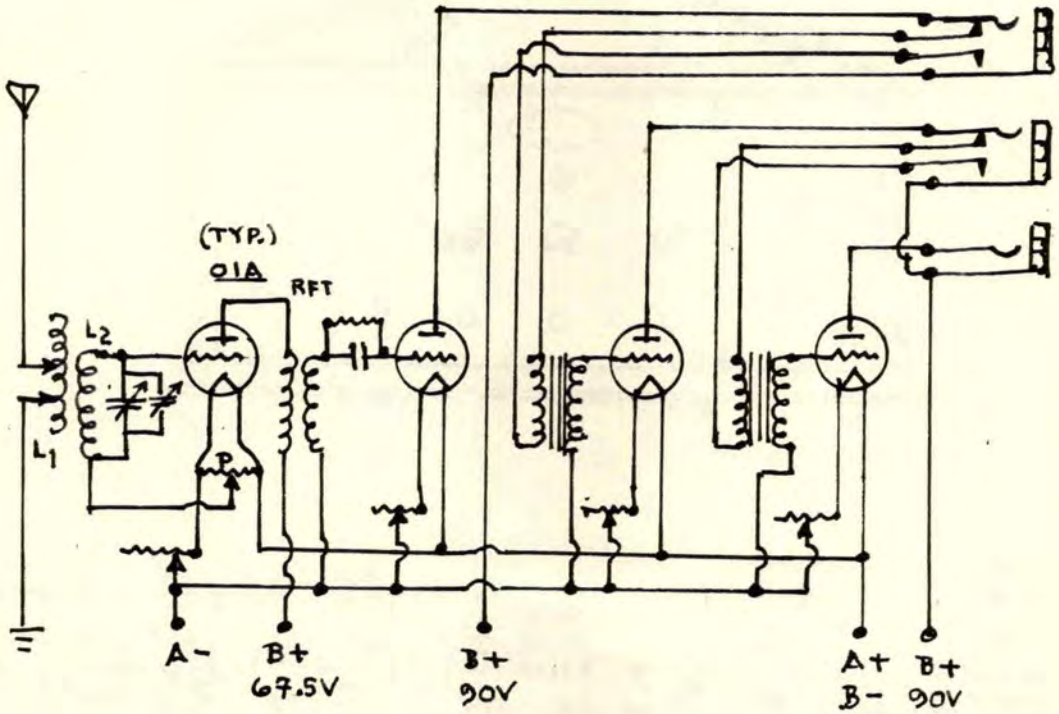

1. RCVR. NOT VERY EFFECTIVE ON DX: A RCVR. FOR LOCAL STATIONS.
2. 1A AMPERITES MAY BE SUBSTITUTED FOR RHEOSTATS.
3. ADDING A TUNED RF XFRMR. WILL AID VOLUME; RFT SHOWN IS UNTUNED.
4. L_1 = 21T, # 22 DCC, TAPT EVERY 2nd T; 3¼"Ø FORM. L_2 WOUND ON SAME FORM w/ ¼" SPACE; 45 T, #22 DCC.
5. P = 200/400 Ω. (Controls oscillation of RF tube.)
6. FIL RHEOS. = 10 Ω (4).
7. AF XFRMRS. = 2:1 RATIO (2).
8. PADDER = .00004 MFD MIDGET VARIABLE.
9. VARIABLE = 250 MMF.

FEDERAL "ORTHOSONIC" NEUTRODYNE, 1926

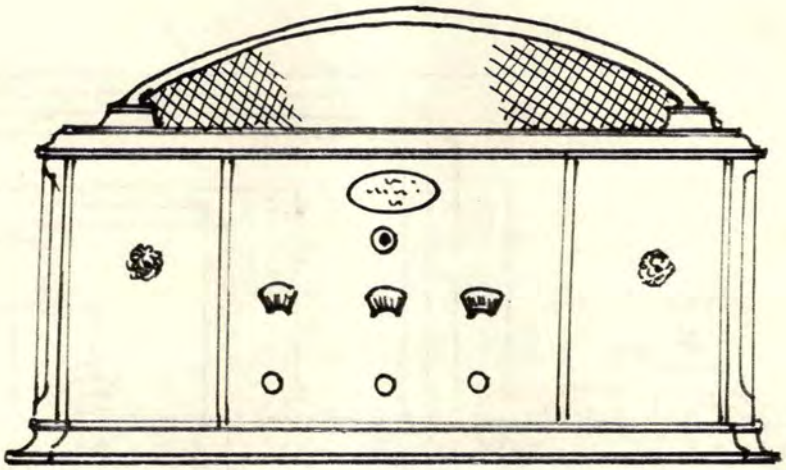

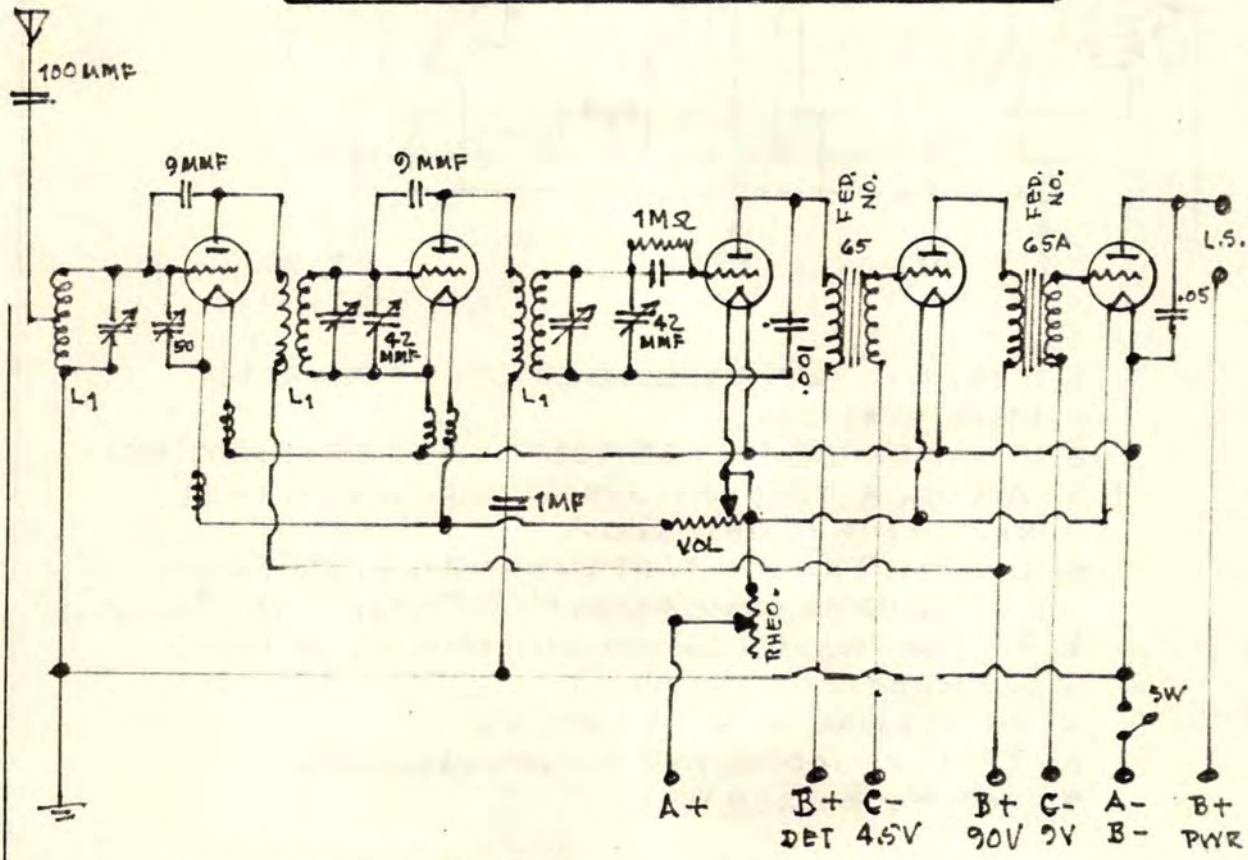

VARIABLES = .0005 x3
COILS L_1 = 165 mH x3

(RC 1-30)

(Sht. 1)

THE FENWAY "CONCERTROLA" AC SET, 1928

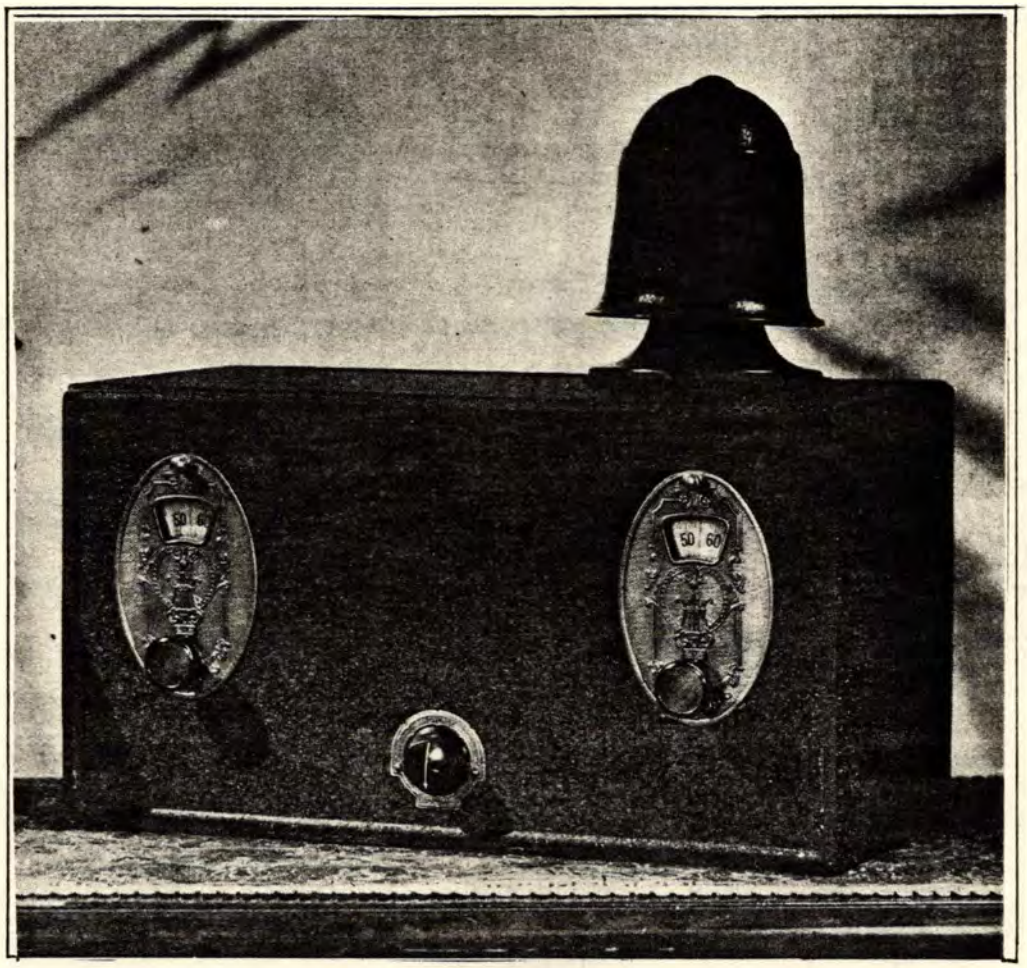

LEO FENWAY enjoyed a brief spate of popularity among home-set builders in the late Twenties. The receiver shown was perhaps his most ambitious effort, but it was also his last. He died in the Autumn of the year this set was offered to the public, at the age of 38. His real contributions lay in rather ingenious coil-design for power transformers and, earlier, RF coil designs, as well as a staunch advocate for eye-appeal of his cabinetry. The cut above shows a metal cabinet the opened for service four different ways, which was an innovation. If you have the "Concertrola" cabinet with junk inside, the following pages may inspire you to reconstruct the set, with better AC-heated tubes, which present no problem.

(Sht. 2)

THE FENWAY "CONVERTROLA" AC SET, 1928

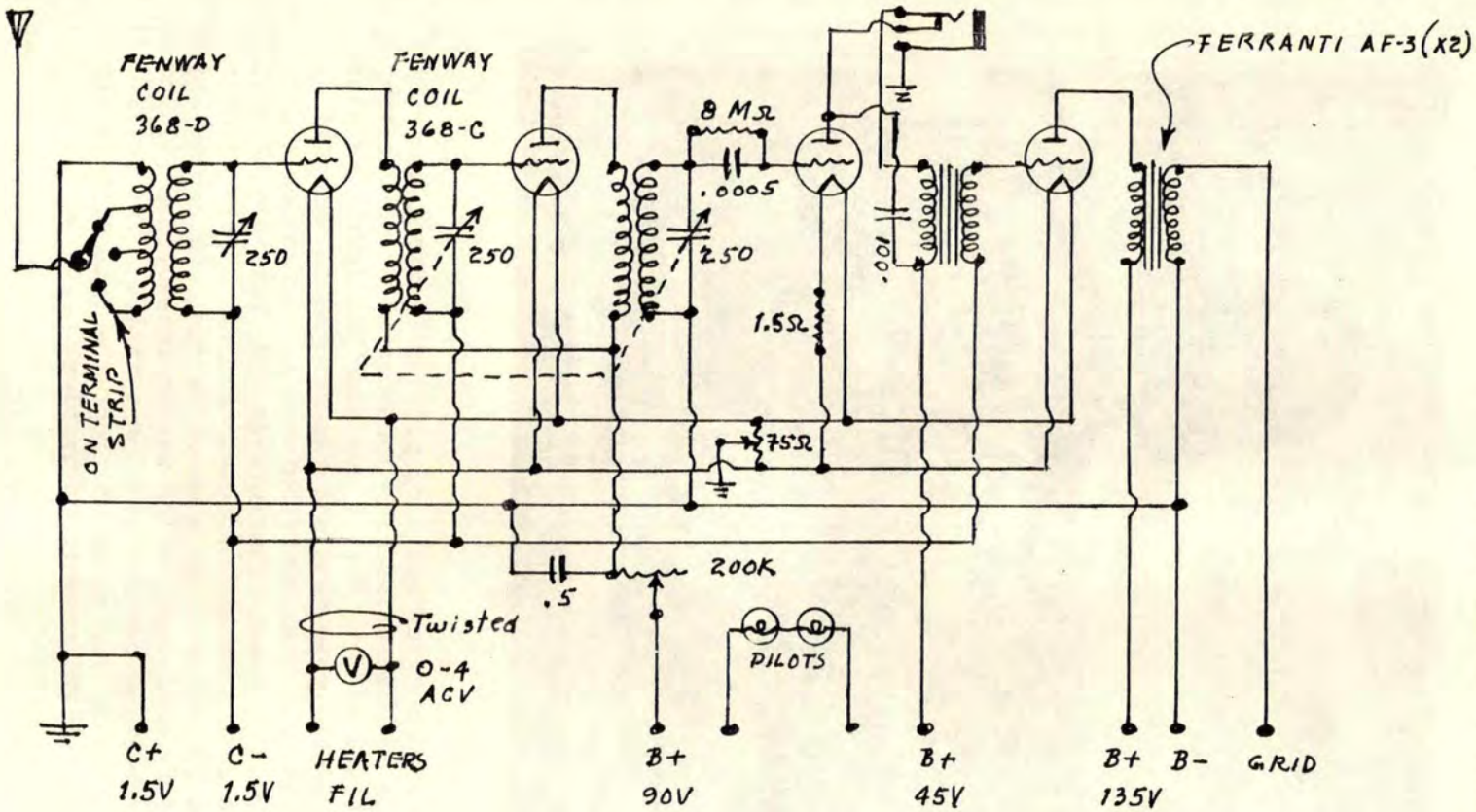

HAMMARLUND Variables. (See Sht. 3 for Power Supply.)
(4) McCULLOUGH AC tubes used originally: later AC tubes may be substituted by matching electrical characteristics - eg., 24, 26, 27, etc.
Metal Cabinet = 10" x 18" x 9 3/4".

(RW 5.5.28)

(Sht. 3) THE FENWAY "CONCERTROLA" AC SET, 1928

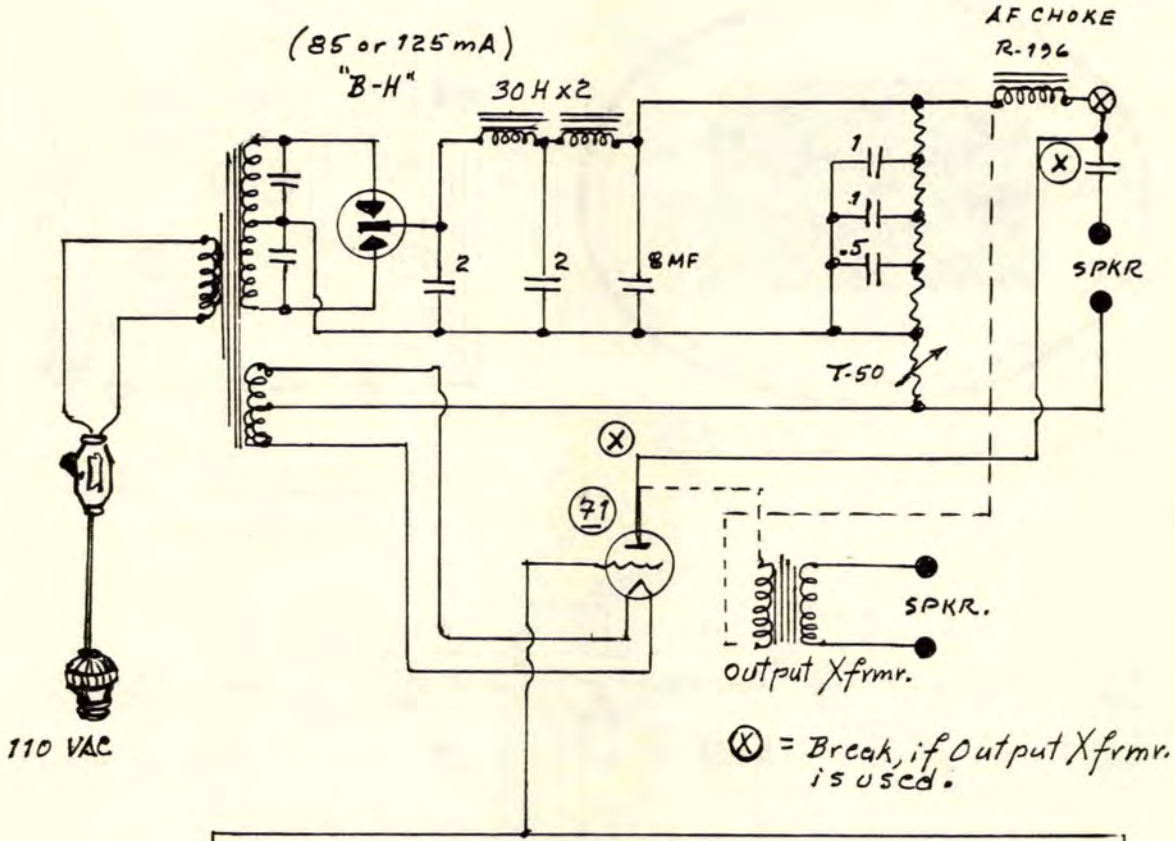

ANT	ANT	ANT	GRID	H1	H2	H3	C-	135	90	45	B-

FENWAY TERMINAL STRIP

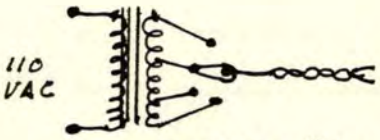

FENWAY "Concertrolastat" (Modern xfrmr. may be used.)

BASIC COMPONENTS:

THORDARSON 171 Power Compact.
" R-196 AF Choke.
" 171 Voltage Divider.
TOBE 171 "B" Block (condensers).
ELECTRAD "Truvolt" Type T-50.

NOTE: 80 may be substituted for the Raytheon "B-H".

FERGUSON 6-TUBE TRF,

Dial Was In Wave-Lengths.

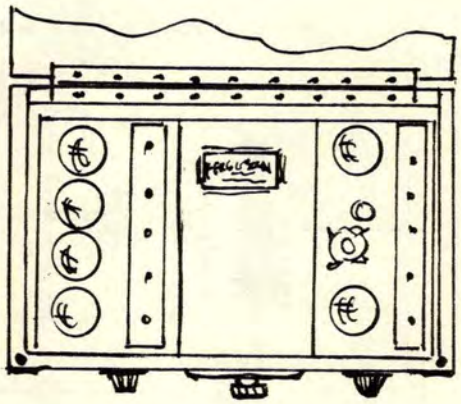

TOP VIEW- LID UP
(Model 10)

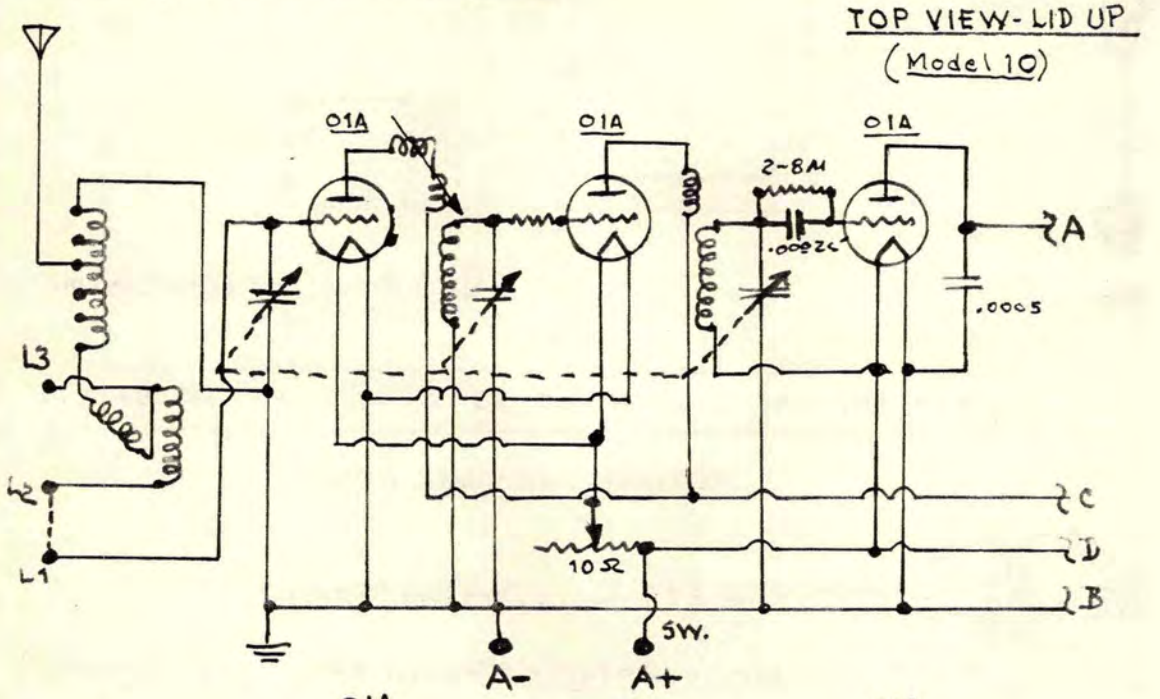

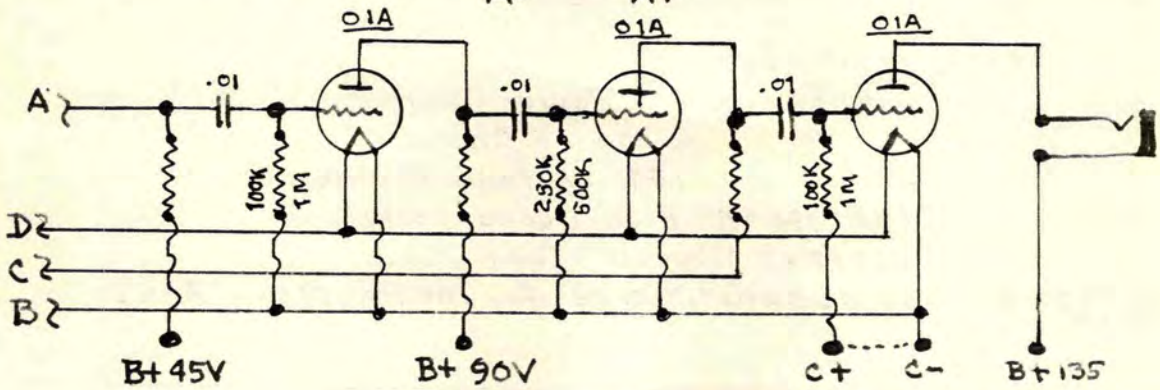

FITCH "TROPODYNE" SUPER-HET, 1925; Sht. 1

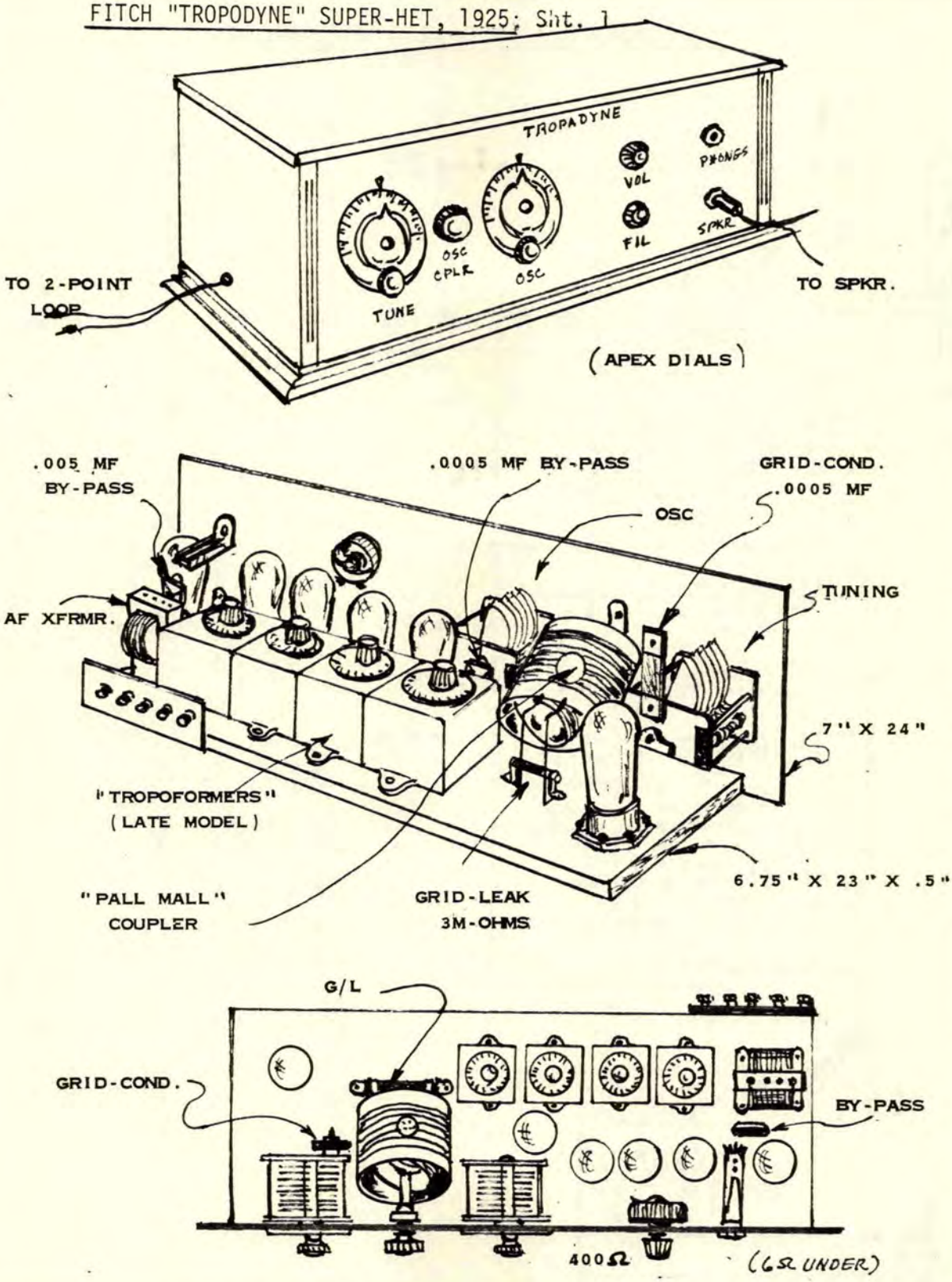

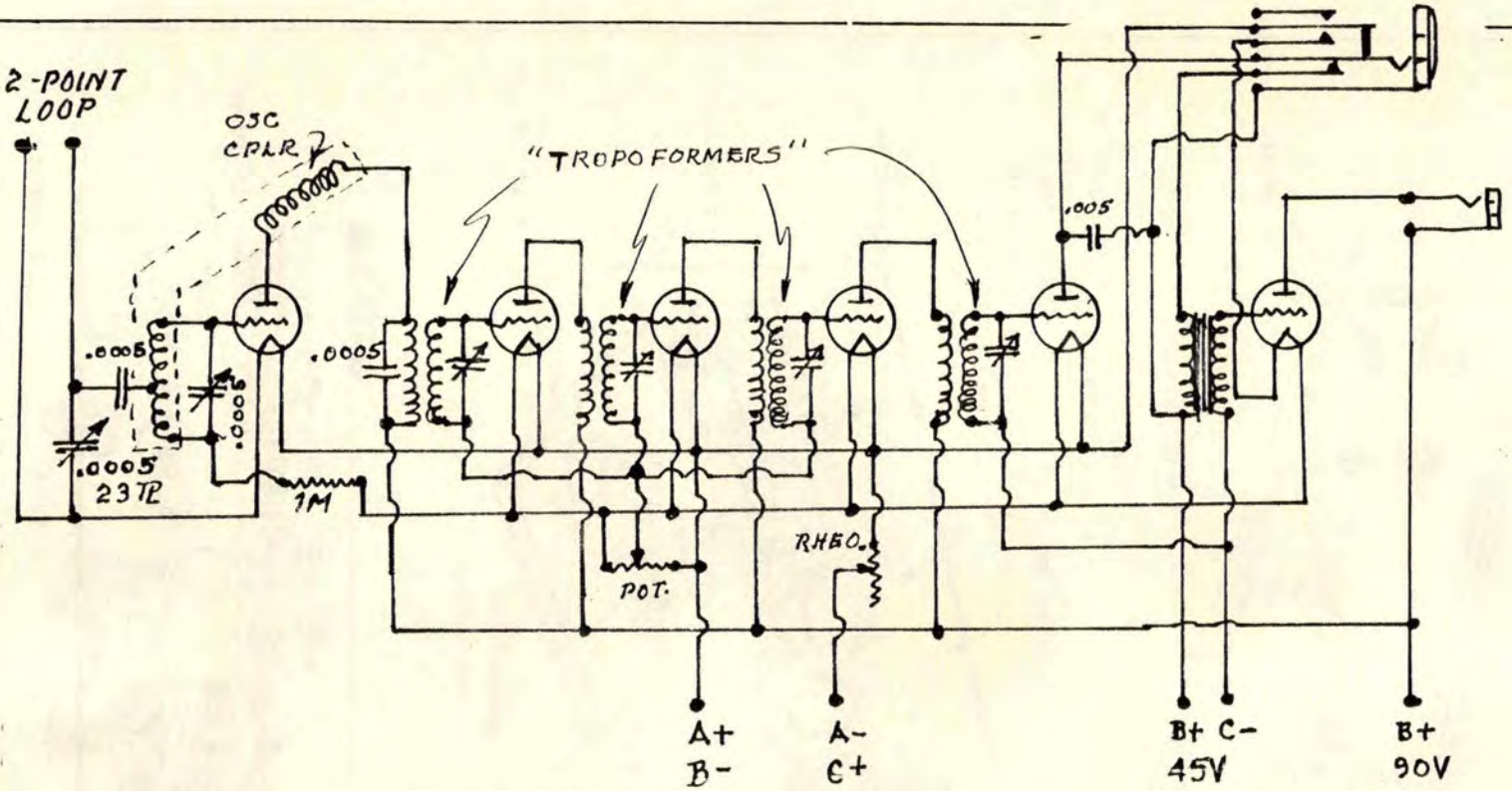

FITCH "TROPODYNE" SUPER-HET, 1925; Sht. 2

PARTS LIST: (2) APEX Dials.
ACME B-2 AF Xfrmr.
Rheostat - 6-ohms for 01As.
30-ohms for V99s.
400-ohm Pot.
Grid-Leak may be ¼ or ½-Megohms.

ADJUSTING THE "TROPOFORMERS": Set all 4 dials at 50. Tune in a station. Tune one xfrmr. at a time for loudest reception. Rotate pot. for clearest signal.

NOTE: Full-scale copies of original blue-prints for constructing the "TROPODYNE" are available from Olde Tyme Radio Co. for $10 a set.

FITCH "TROPODYNE" SUPER-HET, 1925; Sht. 3

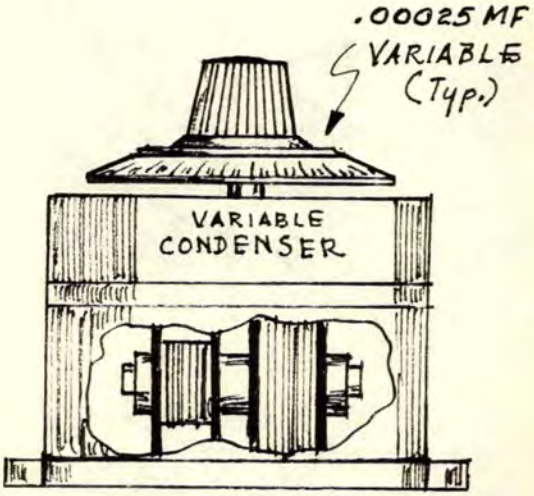

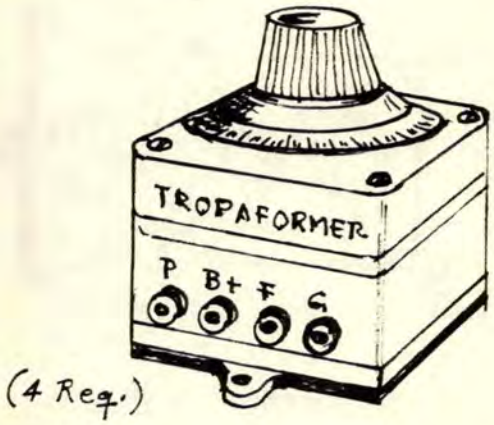

MOULDED HARD RUBBER BOX: WOOD MAY BE USED IF YOU WIND YOUR OWN COILS.

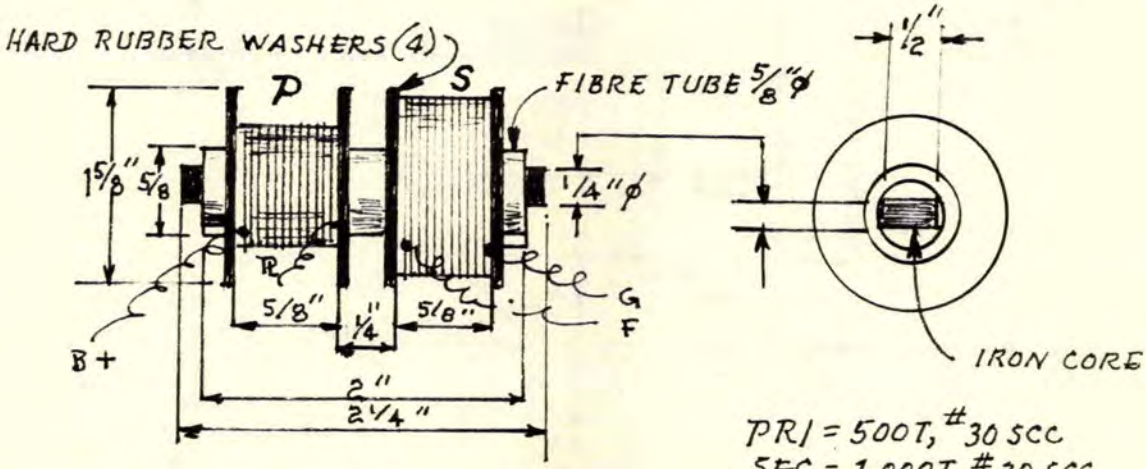

PRI = 500T, #30 SCC
SEC = 1,000T, #30 SCC

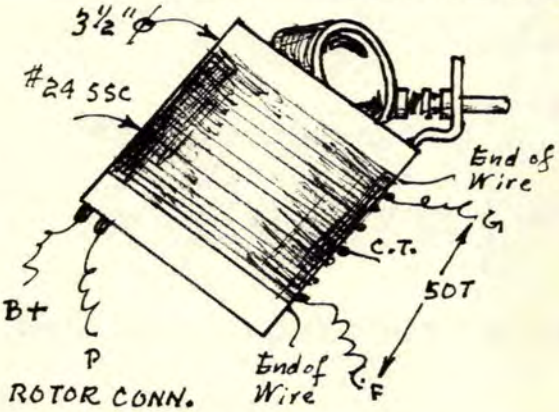

OSCILLATOR COUPLER DETAILS

"PALL MALL" brand coupler used by Fitch. Any good quality Variocoupler may be used.

The ROTOR was used as a TICKLER.

Covered all BC. bands.

FLEWELLING SUPER-REGENERATIVE, 1928

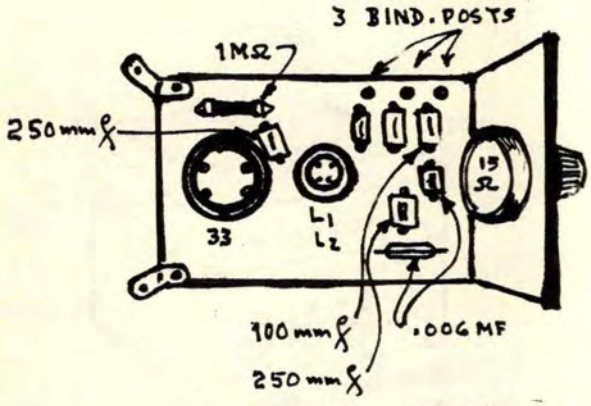

BOTTOM VIEW

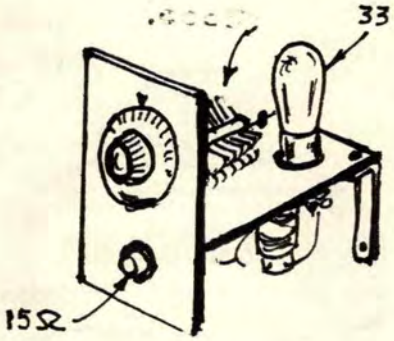

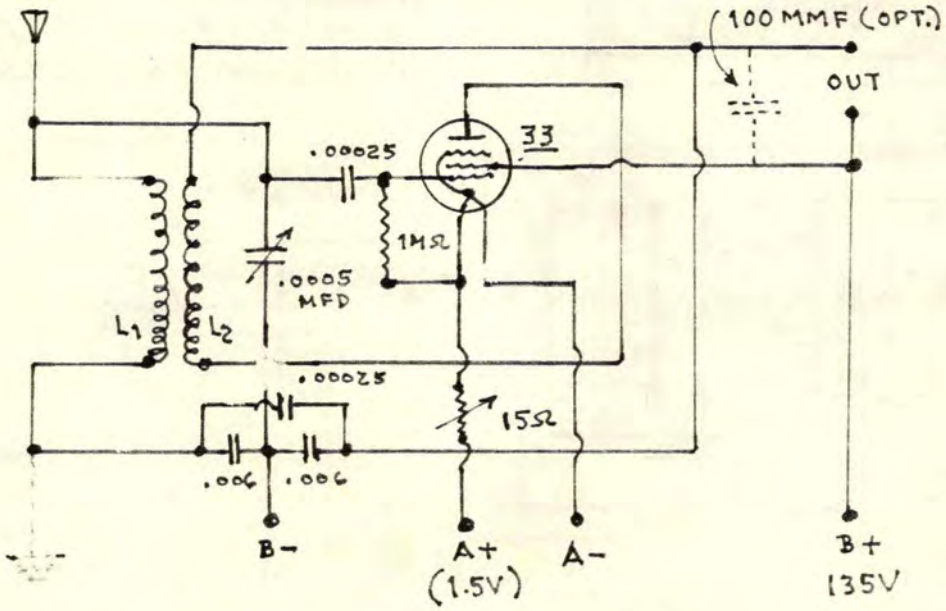

COIL DATA: (FORM = 1"ϕ x 3")

L_1 = 110T, #32 Enamelled.
L_2 = 45T, #36, DSC: Wound below GND end of SEC (L_1).

L_1 = 75T, #32 Enamelled.
L_2 = 50T, #36, DSC.
} COIL FORM = $2\frac{1}{2}$"ϕ.

NOTE: INSENSIVITY MAY BE DUE TO REVERSED L_2 CONNEXIONS.

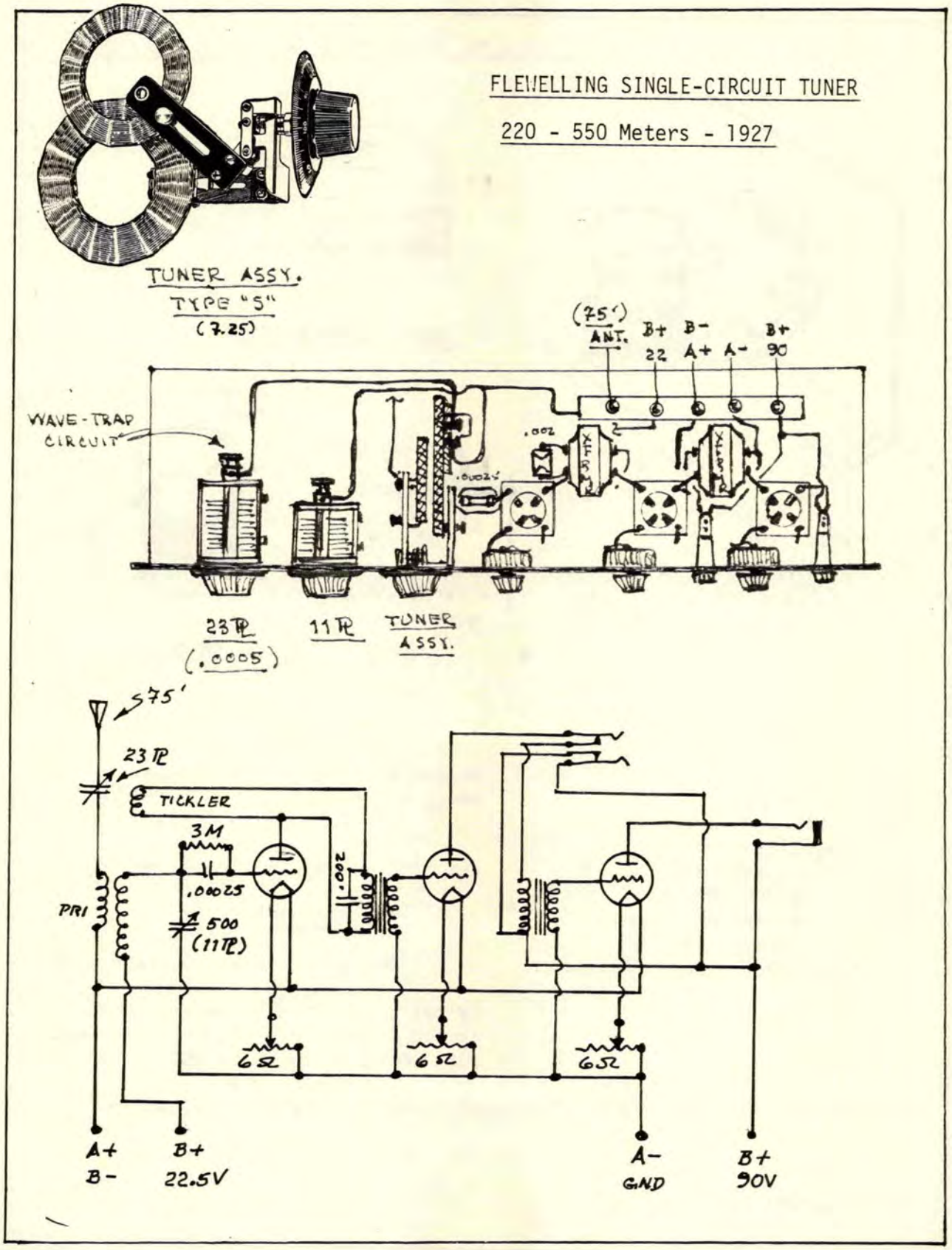
FLEWELLING SINGLE-CIRCUIT TUNER
220 - 550 Meters - 1927
TUNER ASSY.
TYPE "S"
(7.25)
(75')
ANT.
B+
22
B-
A+
A-
B+
90
WAVE-TRAP CIRCUIT
.002
.0002
23 TR
(.0005)
11 TR
TUNER ASSY.
75'
23 TR
TICKLER
3M
.00025
.002
PRI
500
(11 TR)
6Ω
6Ω
6Ω
A+
B-
B+
22.5V
A-
GND
B+
90V

FLEWELLING "SUPER-BOOSTER", 1925; Sht. 2

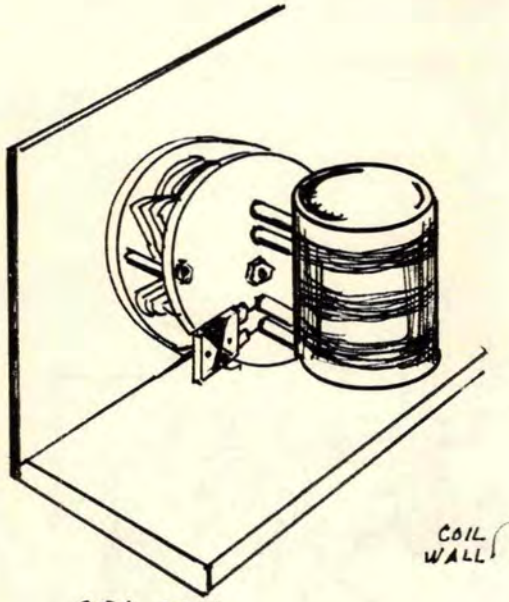

OSC COIL MOUNTING DETAIL

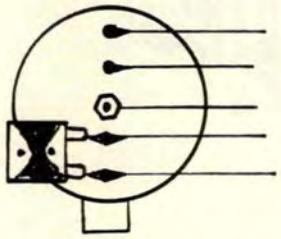

REAR VIEW OSC COIL

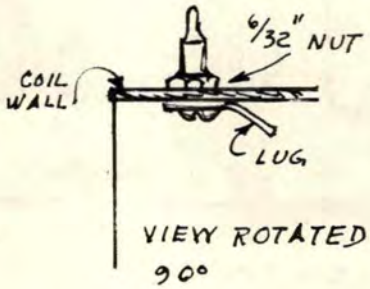

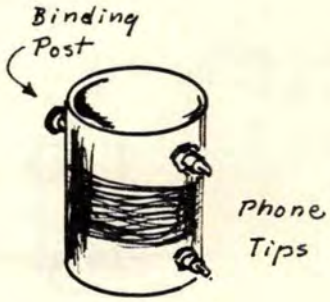

RF COIL

NOTE

Coils were originally designed as plug-in types. Jacks were screwed into Variable terminals; 2 holes drilled into back plate for OSC. The phone tips were soldered into coil terminals, to align with jacks on Variables.

WARNING!

Remove GND from receiver when using a loop.

Set receiver dials for 600 meters.

COIL DATA

RFC = 100T #30 DCC, single layer, on 3"Ø form.
If RFC & .00025 are used, B+ 90V at top of diagram goes to bottom of RFC. Single wire with arrow only to set.

L8 = (optional): 20T #22/#24 DCC wound directly on first coil in set.

(RITH 11-25)

FLEWELLING "SUPER-BOOSTER" , 1925; Sht. 1

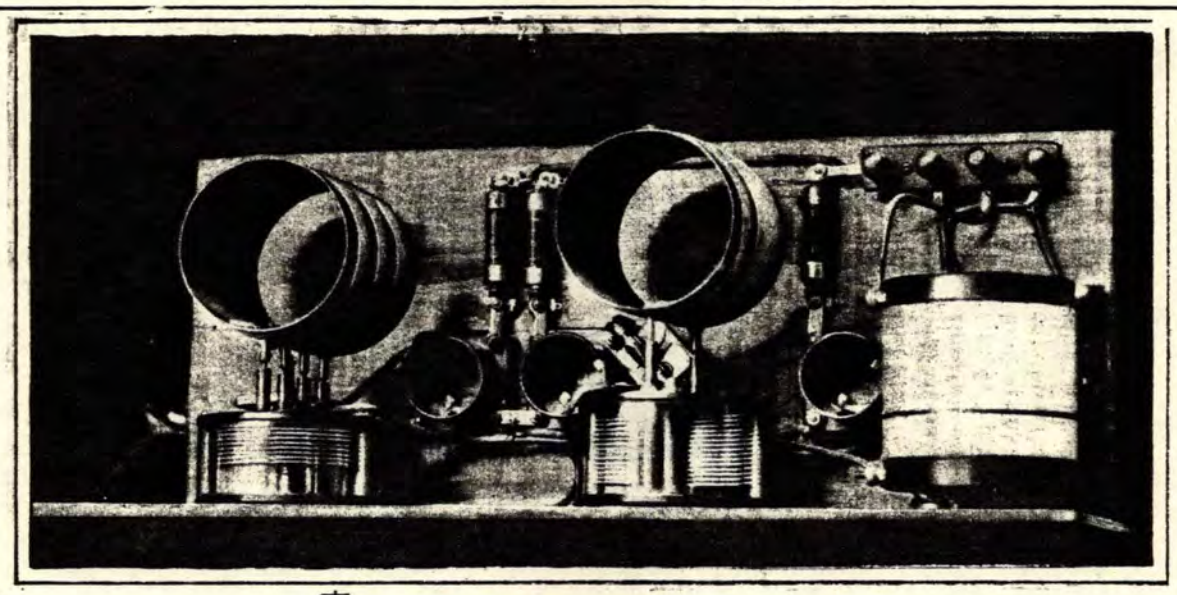

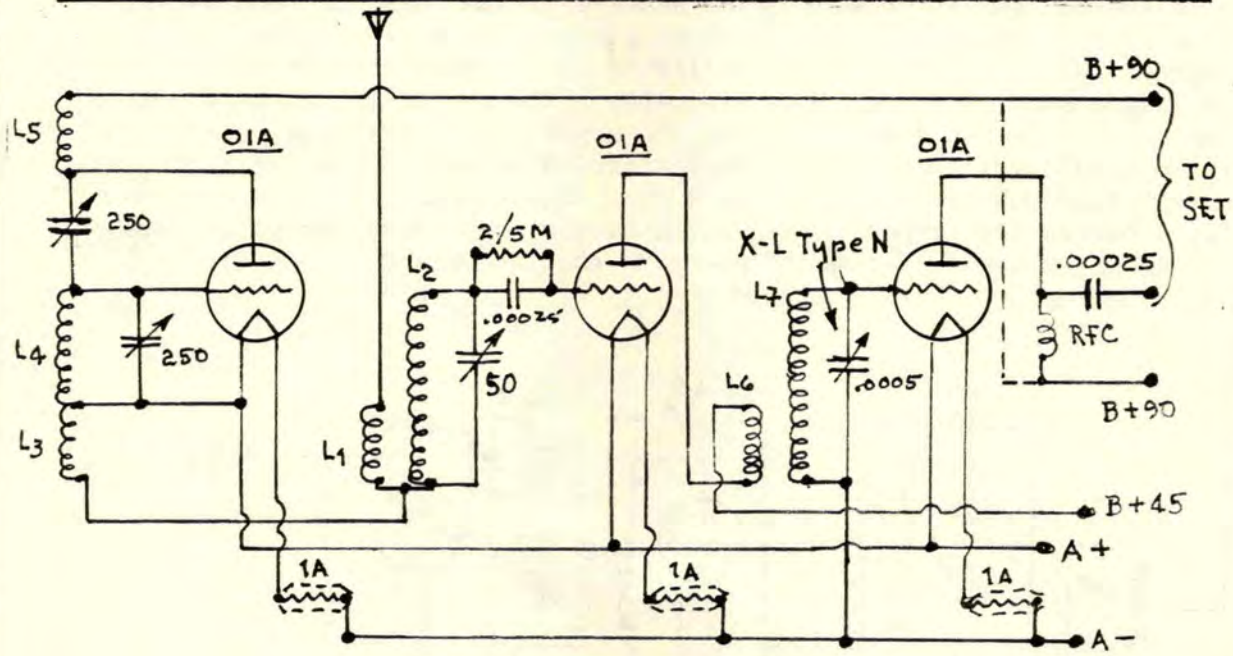

COIL DATA - 3"Ø Form x 3½" Long:

L1 = 10T, #24 DCC	L5 = 16T
L2 = 50T	L6 = 25T
L3 = 10T	L7 = 55T
L4 = 16T	L8 = 20T

Spacing between windings ½". except L1,L2,L6,L7.

The greater the distance between L1 & L2 = greater selectivity.

FREED-EISEMANN KD-50 KNOCK-DOWN NEUTRODYNE

J.C.FREED, Ch. Engnr.,
Freed-Eisemann Radio Co.

"The KD-50 Knock-Down Neutrodyne Receiver represents the very latest type of broadcast receiver. It consists of two stages of TRF with neutralisation of capacity-coupling, a non-regenerative detector, and two stages of power audio amplification. The set is the most selective of any type known today, and has the advantage of bringing in stations from great distances without distortion. Stations on the Pacific Coast have often been heard in New York City. The success of this set depends upon having the proper parts and in having these parts properly arranged as shown on the full-scale blue-print that accompanies each kit." -J.C.F.

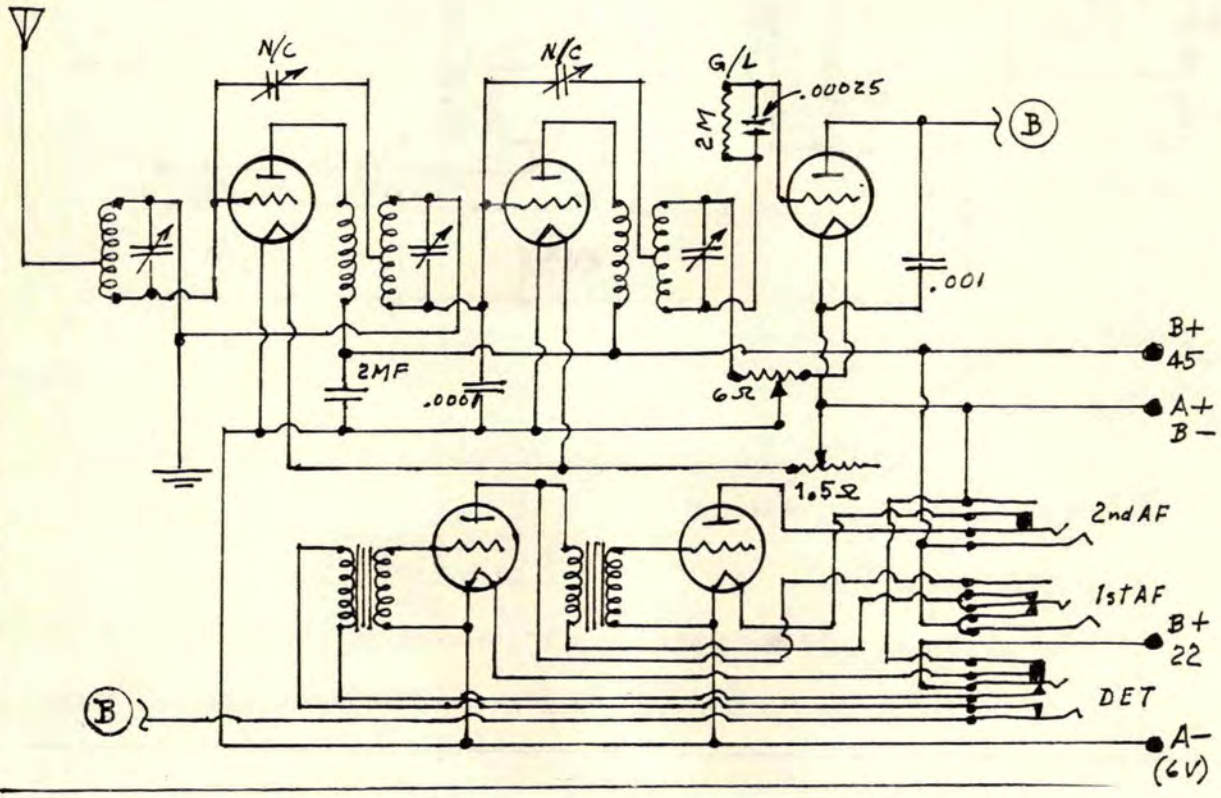

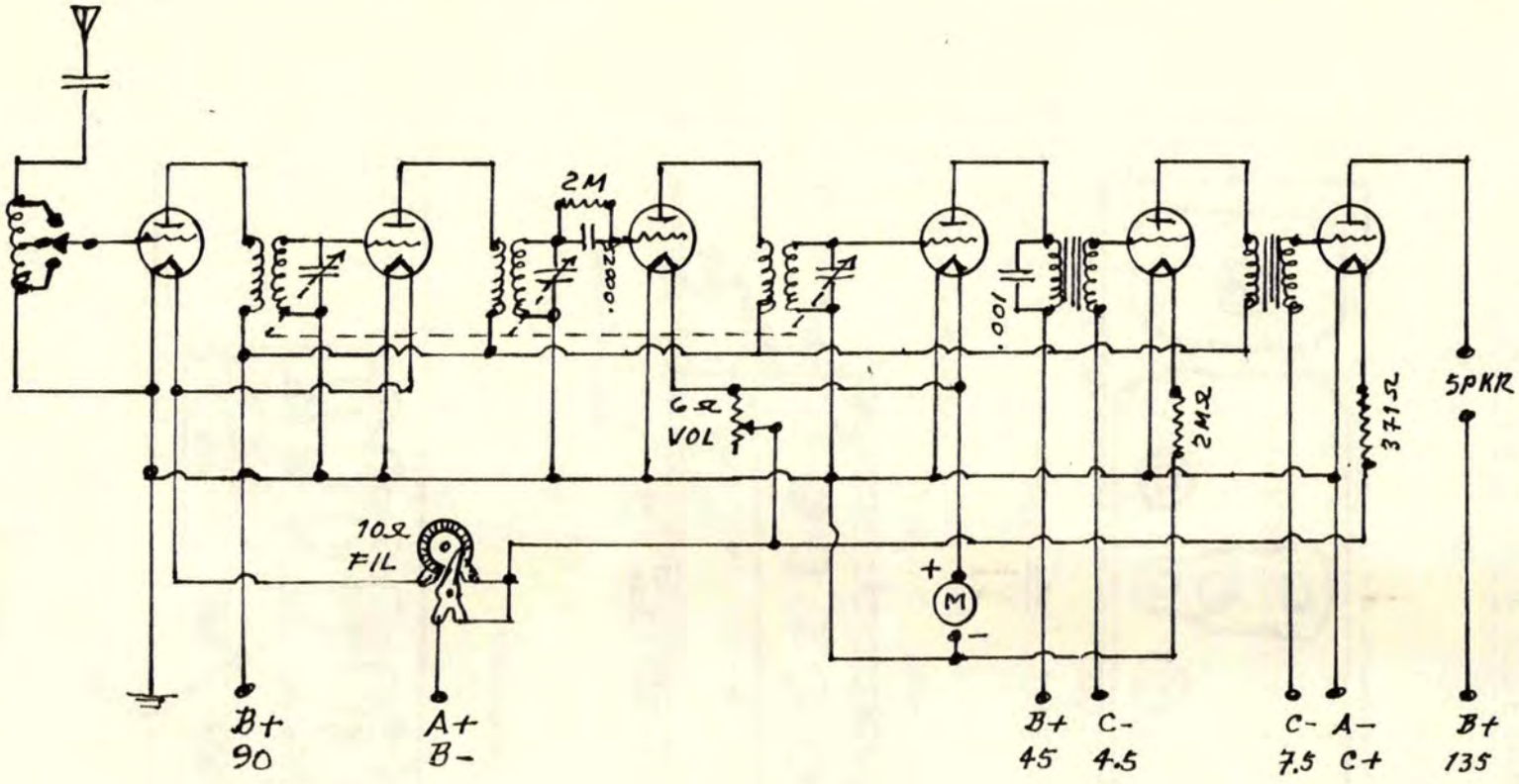

(For values not shown, refer to Sht. 2.)

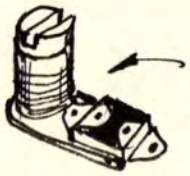

Not Used For This Version

F-E MODEL 48 VARIANT

FREED-EISEMANN Model 48, 1928; Sht. 3

FREED-EISEMANN MODEL 48/FE-30/30N, 40N, 1928: Sht. 1

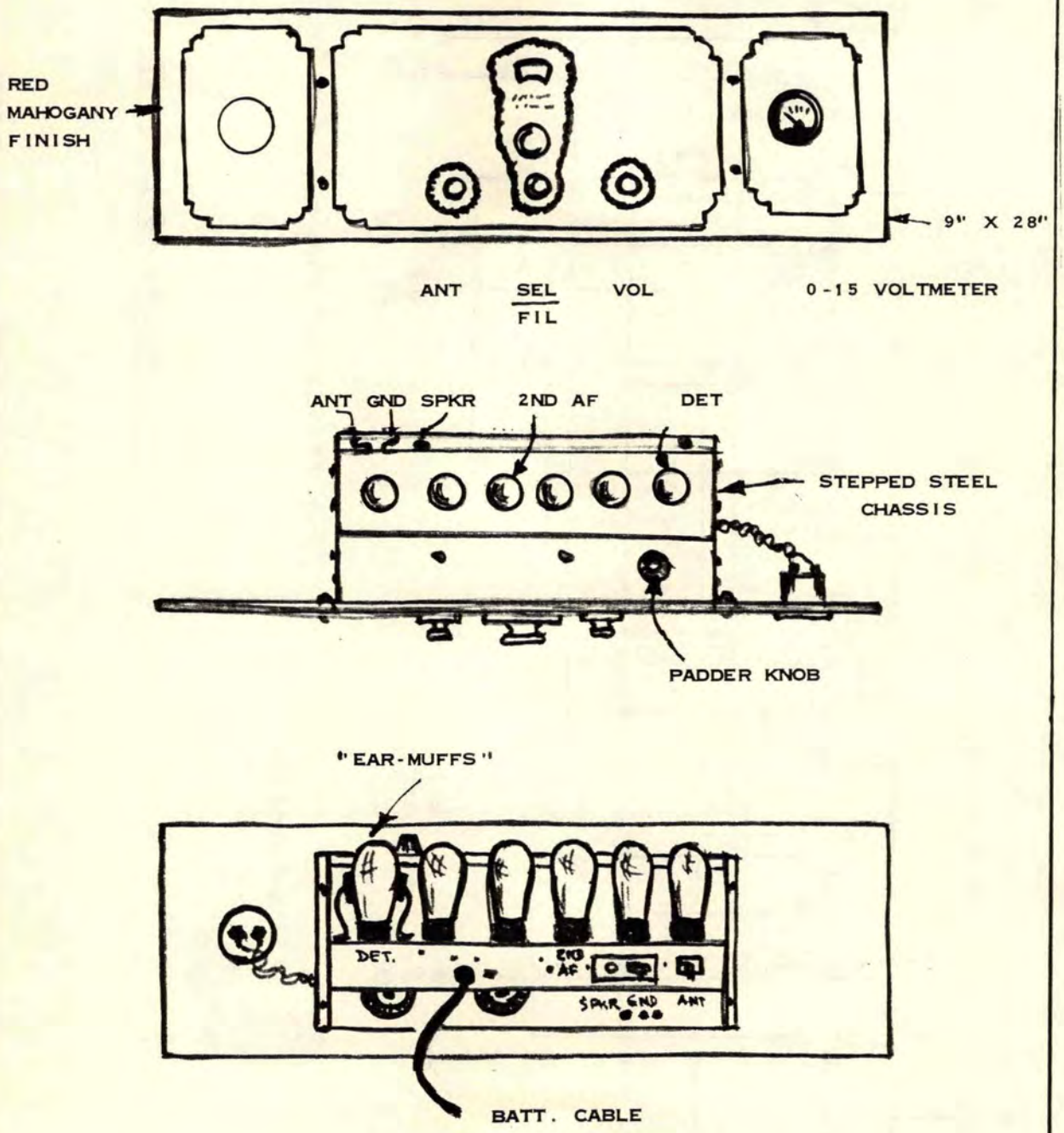

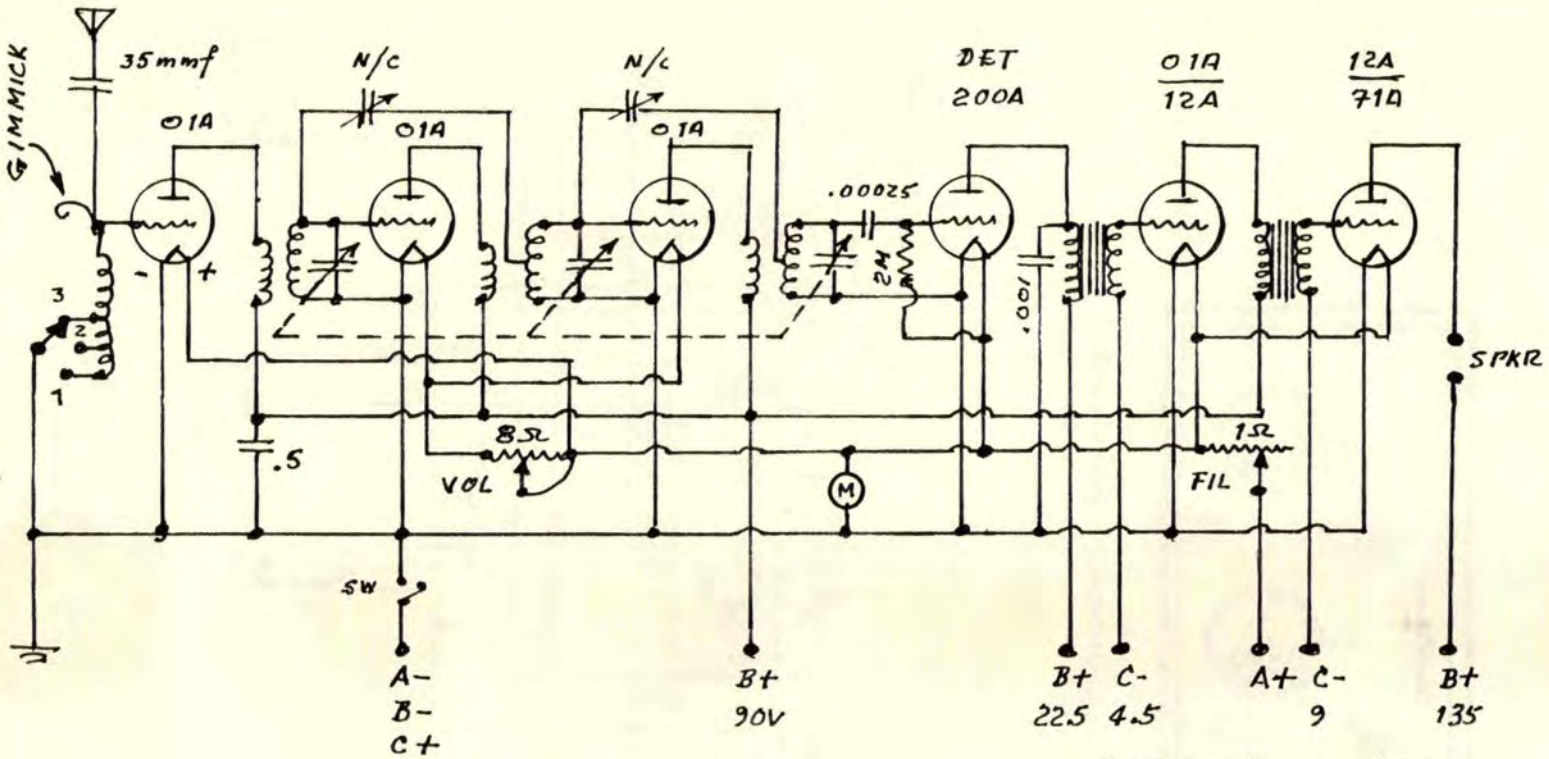

NOTES

1. 3-Gang Variables, 320 mmf each sexion.
2. C-9V can go to C-27V.
3. FIL rheostat 2A capacity.
4. VOL " 0.5A " .
5. All Rotors grounded.
6. Meter = 0-15VDC.

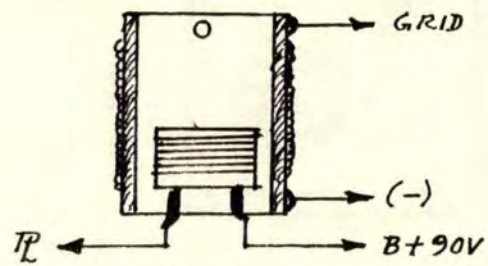

TYPICAL CROSS-SEXION of RF COILS

FREED-EISEMANN Model 48, 1928; Sht. 2

FREED-EISEMANN Model FE-17, 1926

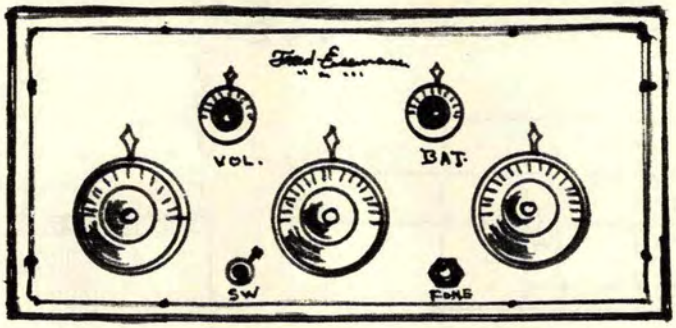

ANT TUNING | 1ST RADIOSTAGE | 2ND RADIOSTAGE

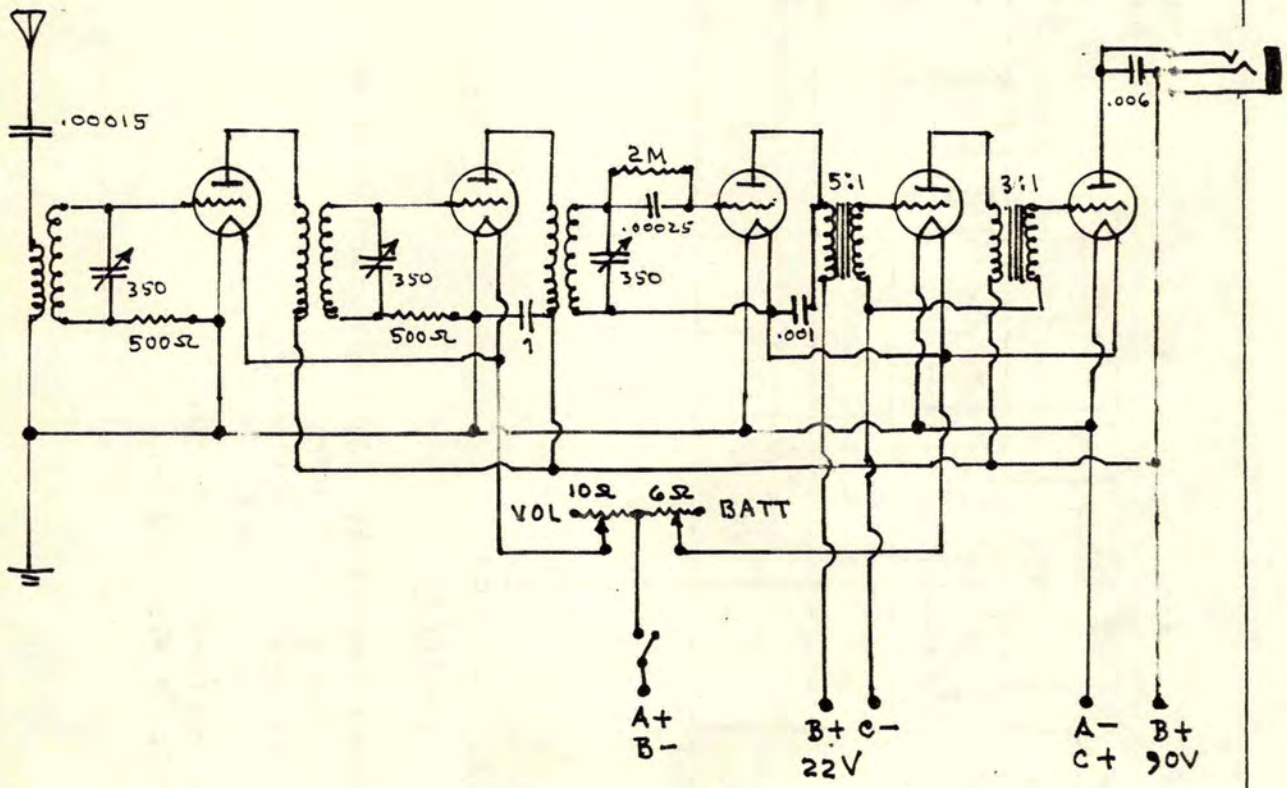

FREED-EISEMANN's UNKNOWN ORPHAN, 1925

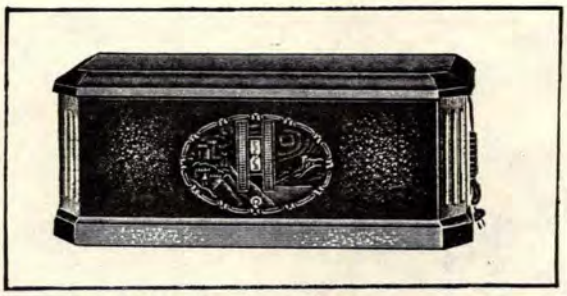

Model 80

In terms of a collectable item, the TRF shown above is a truly rare item. It was Freed-Eisemann's first attempt at what was called "a socket-powered" set. It was strictly for DC mains. The metal cabinet measured 11" x 20" x 8½", finished in a bronze colour, very dark. The brass escutcheon mounted the volume control, a drum dial for a 4-gang condenser, and a snap switch. The volume control was shunted - i.e., connected - across the aerial and ground. The specifications are listed below:

Four stages of tuned radio frequency.

Detector using the 01A.

One stage of transformer-coupled AF, using a 71A.

One stage of P-P amplification, also using 71As.

While I've never thought of myself as a "collector", nor do I have any special interest in F-E marques, I would like to see the receiver shown, if only to trace out its circuitry for my own edification - and perhaps for others.

* * *
* *
*

THE FRESHMAN "MASTERPIECE", TWO VERSIONS: Sht. 1

THE PANEL VIEW

Chas Freshman began business by offering a mains aerial and ground plug, called "Antella". It sold for 75¢. Two years later he was producing his "Masterpiece" series of receivers, which were quite succesful for several years, with practically no changes. Originally offered in kit-form, he began offering his sets, with the basic circuit unchanged, in table cabinets and consoles in the late Twenties.

Aside from the fact that the "Freshman" was easy to construct and easy to operate, its performance was rather exceptional: also its price, which attracted many a home-constructor. As with all manufacturers of kits, Freshman's claim to fame lay in the basketweave coils, touted with all manner of superiorities over other coils. There was a bit of truth in their claims, in as much as when Goldberg became the head of PILOT, his first offering, after turning PILOT away from manufacturing only electrical goods for telephones and telegraphy, was a TRF kit that used Freshman coils and variables combinations.

While the "Masterpiece" basic circuit remained unchanged for several years, until it was "electrified", there were a few subtle or minor changes at the very beginning. In the following pages you will find the first "Masterpiece" from 1925, followed by the 1926 version. If you look closely, you will find those subtle differences.

One reason why Freshman could offer his kits more cheaply than some was that his panels and his baseboard were compressed cardboard, which was much cheaper than hard rubber or Bakelite. Both, incidently, tend to warp and cannot be straightened.

The sketches following are self-explanatory, I feel, and in order to differentiate between the 1925 (the first "Masterpiece") and the 1926 version, simply look for the date in the title of the page. The cut of the panel above is of the 1926 version.

* * *

FRESHMAN "Masterpiece" 5-TUBE TRF, 1926

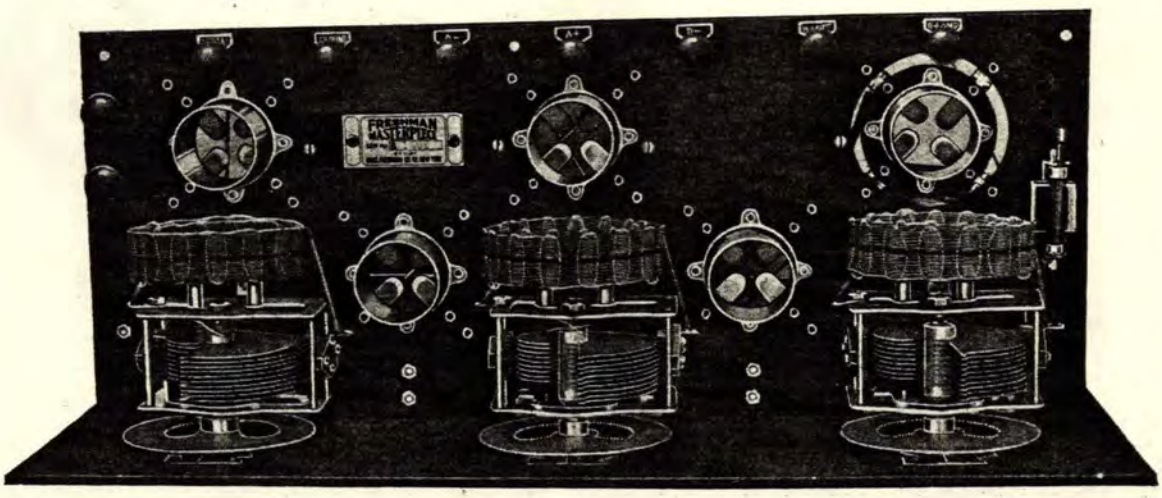

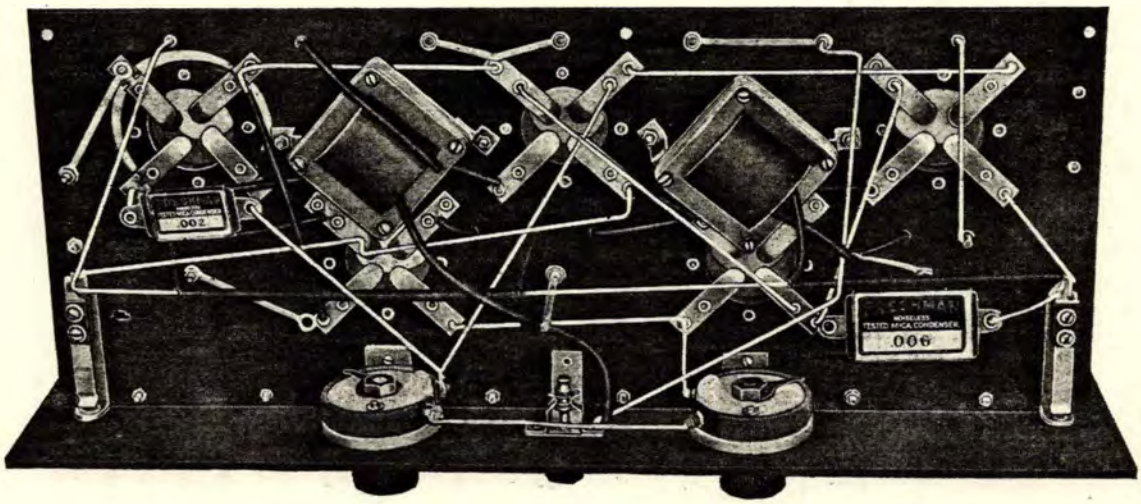

Top and Bottom Views of the 1926 "Masterpiece": the top view of all "Masterpiece" baseboards was pretty much the same - it was the bottom views that revealed the slight differences in added components or the deletion of such.

FRESHMAN "Masterpiece" 5-Tube TRF; 1925

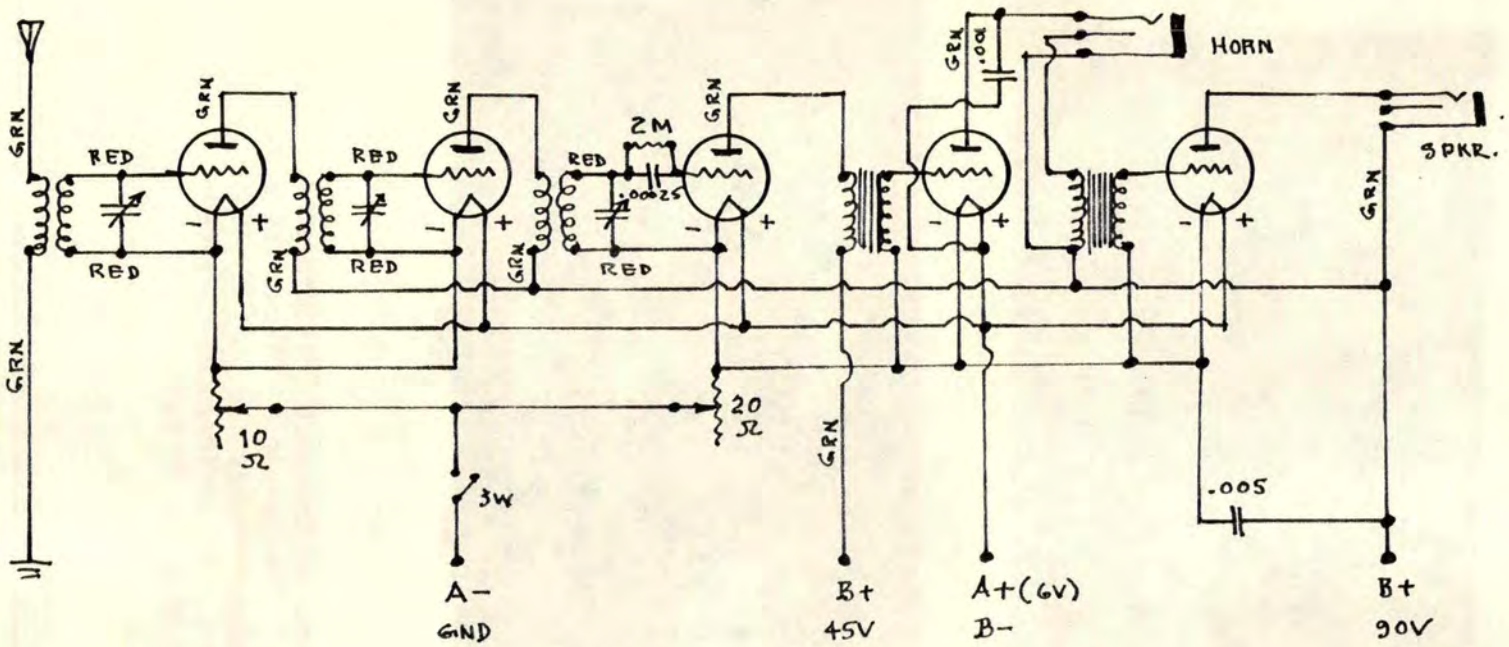

#14 Round buss-bar hook-up.
Coloured wire on coils: GRN = Primary; RED = Secondary.
All tubes 01A.
Sub-panel was plywood, painted black.
10 Ω rheostat was GEN-RAD. (Originally 6 Ω.)
20 Ω rheostat was DeJUR.
AF Xfrmrs. no name; open core type.
FRESHMAN Basketweave Coils (3).

FRESHMAN "Masterpiece" TRF, 1925; Sht. 2

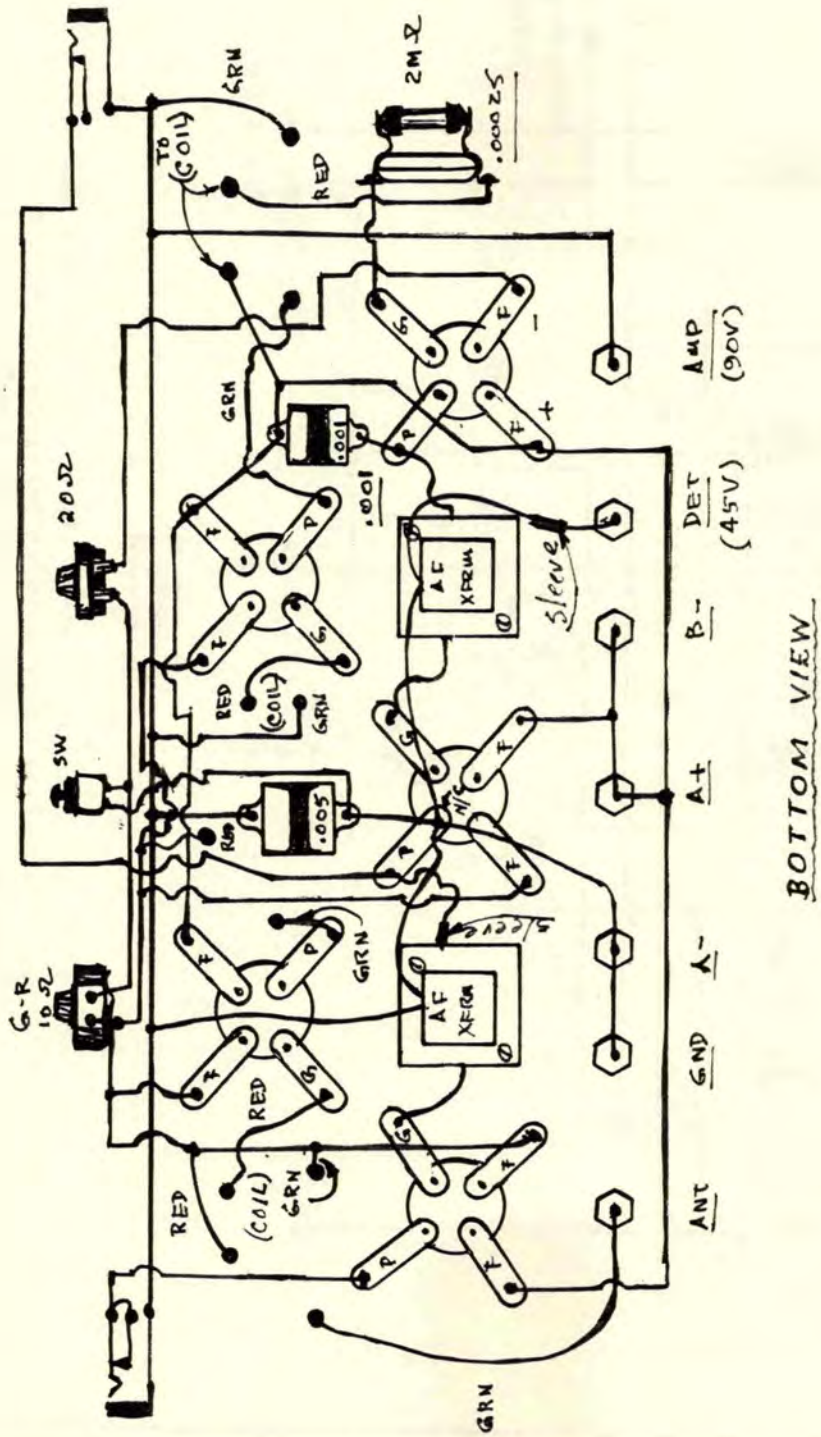

FRESHMAN "Masterpiece" 5-TUBE TRF, 1926

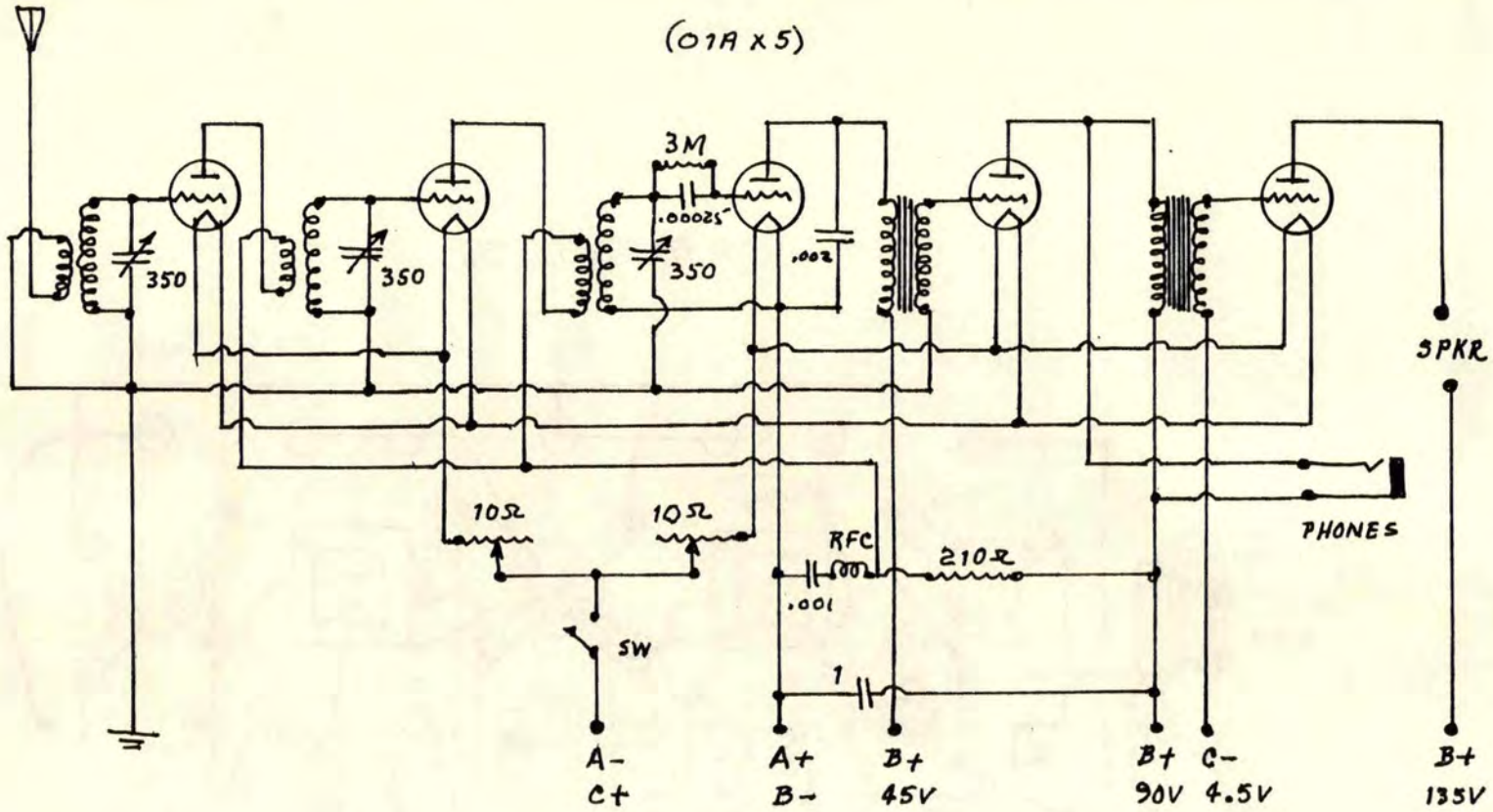

NOTE

After this circuit design, the only other variation was the introduction of what Freshman called their "Equaphase Stabiliser": this was simply a variant of the Hazeltine "Neutrodon".

ELECTRIFYING THE FRESHMAN "MASTERPIECE"; Sht. 1

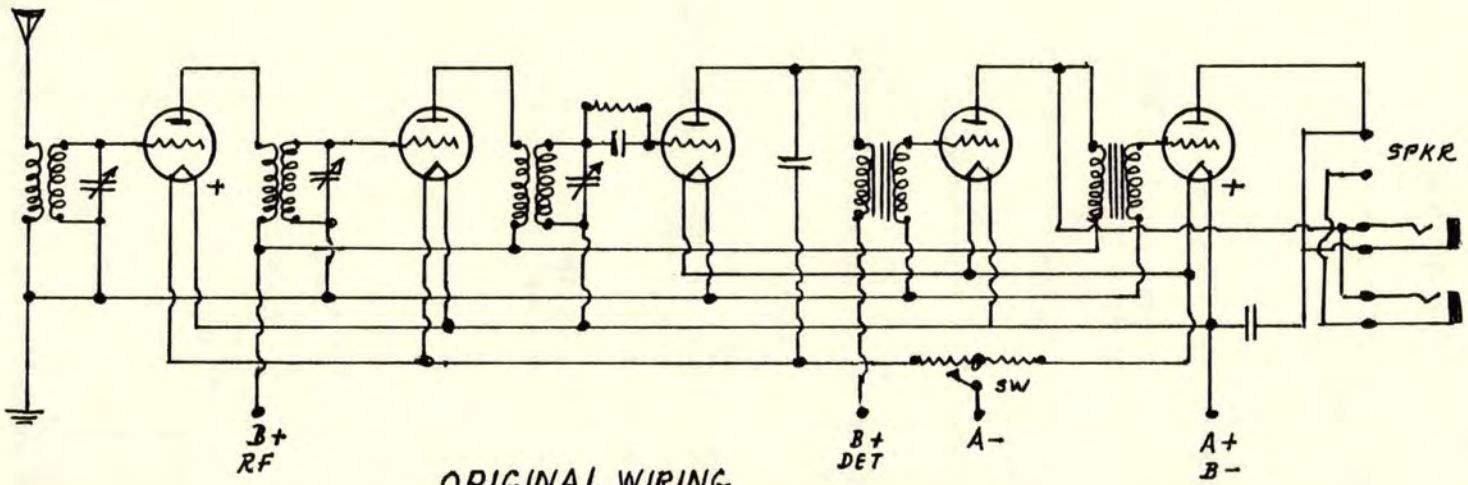

ORIGINAL WIRING

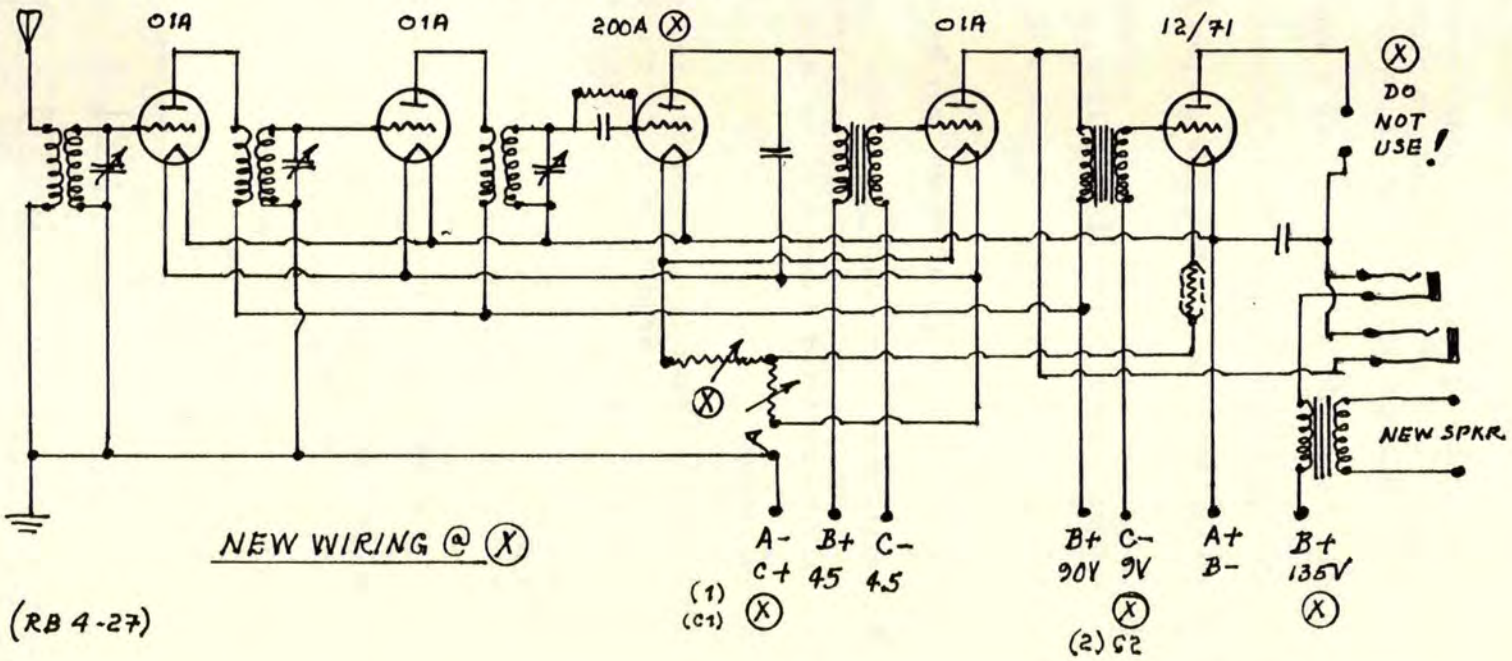

NEW WIRING @

(RB 4-27)

ELECTRIFYING THE FRESHMAN "MASTERPIECE"; Sht. 2

1. Phone jack on rcvr. front panel is used when power amplifier of the single-stage variety is used in place of the 2nd stage amplifier. The 2nd stage amplifier should then be removed.

2. The 200-A tube is suggested as a new Detector.

3. The speaker should not be in proximity of the rcvr.

4. If the 71A tube is used, the output device is not necessary.

5. Output devices may be of the impedence-coupled type, such as S-M, General Radio, National, Mayoline, etc. All are satisfactory.

6. If a power amplifier is incorporated, the last AF stage of the rcvr. is cut out.

7. Existing 1st stage AF xfrmr. may be replaced with later models.

8. Existing rheostat will not handle current draw of the 71A; 71A filament must be controlled by a separate rheostat, or by a 0.5A filament ballast resistor (Amperite) or ballast tube.

9. Procedure:

a) The grid return from the SEC of the 1st AF xfrmr. is cut at point (1) and a flexible lead soldered to the xfrmr. terminal. This lead will supply C voltage to the 1st stage, indicated by C1.

b) The grid return from the 2nd AF xfrmr. is cut at point (2), and a flexible lead soldered to xfrmr. terminal. This supplies C voltage to the power tube, C2.

c) Remove completely lead (3) at the socket.

d) Mount the filament ballast (Amperite) and connect as indicated by the dotted line, to wire joining the two rheostats.

e) Replace rcvr. in cabinet and connect battery and speaker.

10. When changing power tube, consider the following data:

TUBE	PL. VOLTAGE		
	135	150	180
12A	9	9	--
71A	27	23	40

11. If new DET is used, grid-leak should be connected to NEG filament leg

ELECTRIFYING THE FRESHMAN "MASTERPIECE"; Sht. 3

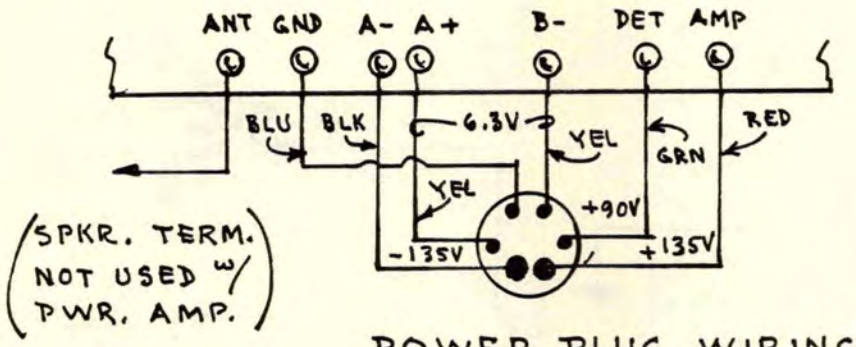

POWER PLUG WIRING

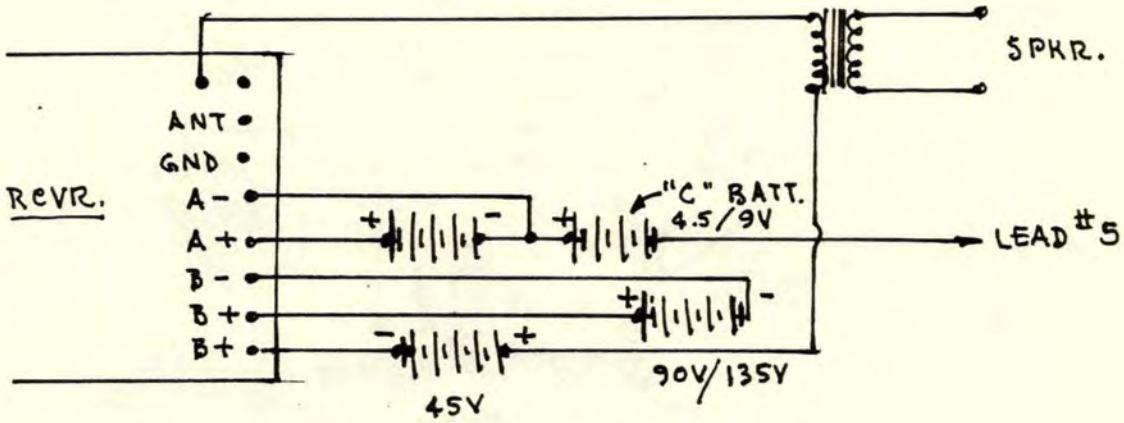

REWIRING WHEN POWER TUBE IS NOT CHANGED

(INSTALLING 12A OR 71A PWR. TUBE REQUIRES 0.5A BALLAST RESISTOR IN (A-) LEG. SEE NEXT PAGE FOR PWR. TUBE HOOK-UP.)

ELECTRIFYING THE FRESHMAN "MASTERPIECE; Sht. 4

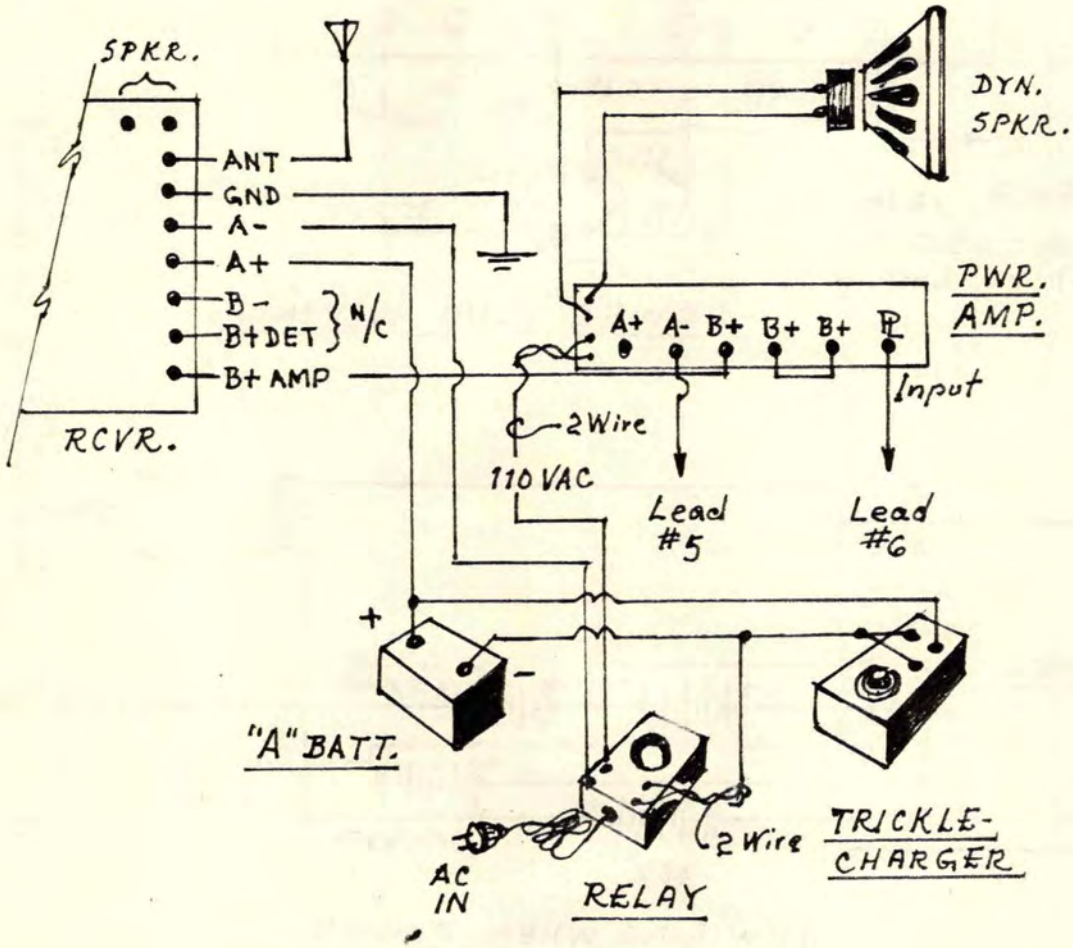

NEW POWER CONNEXIONS

(Leads #5 and #6 are routed under chassis.)

FRESHMAN MODEL Q-15 - 1928

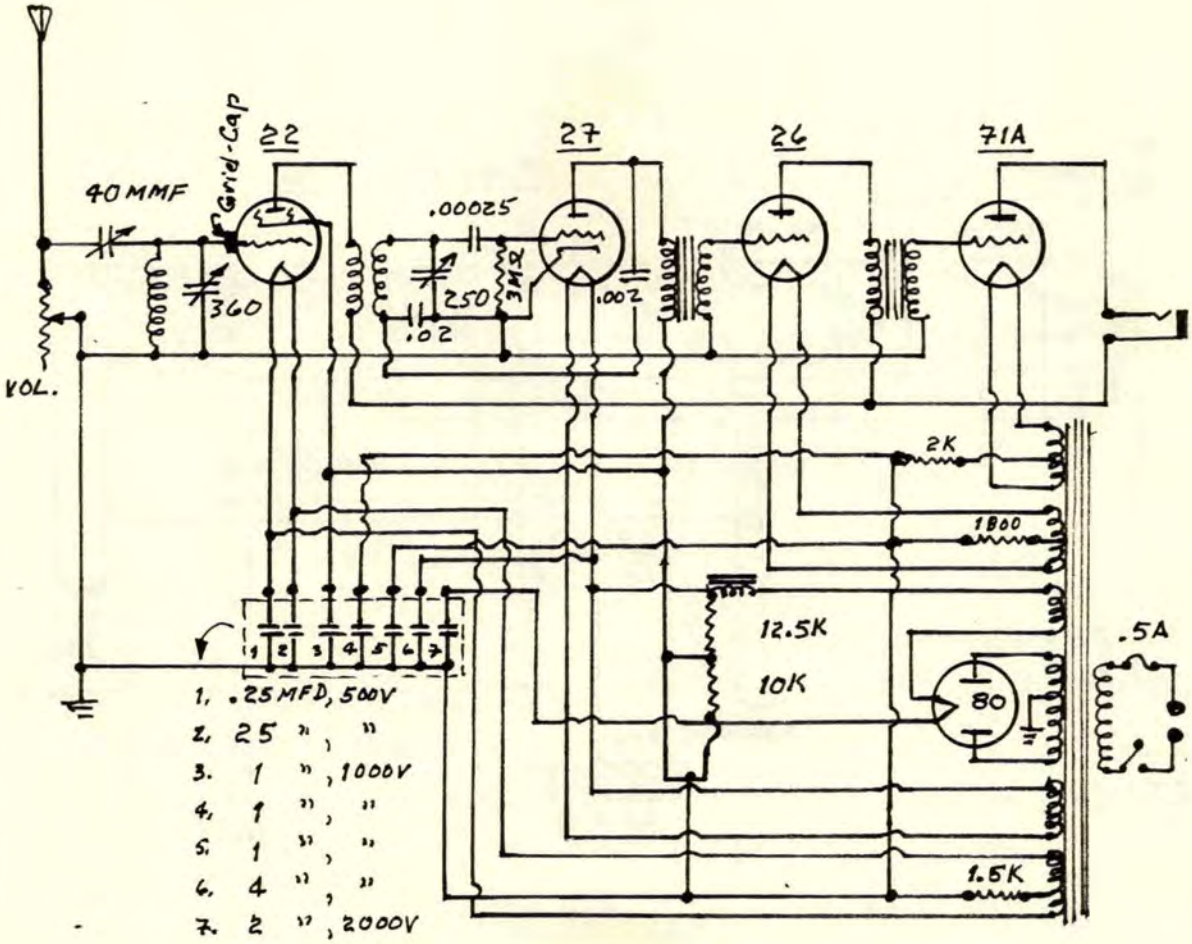

GAROD Model EA, 1927

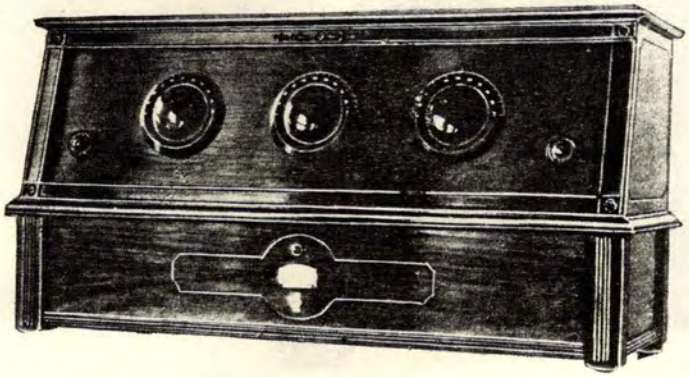

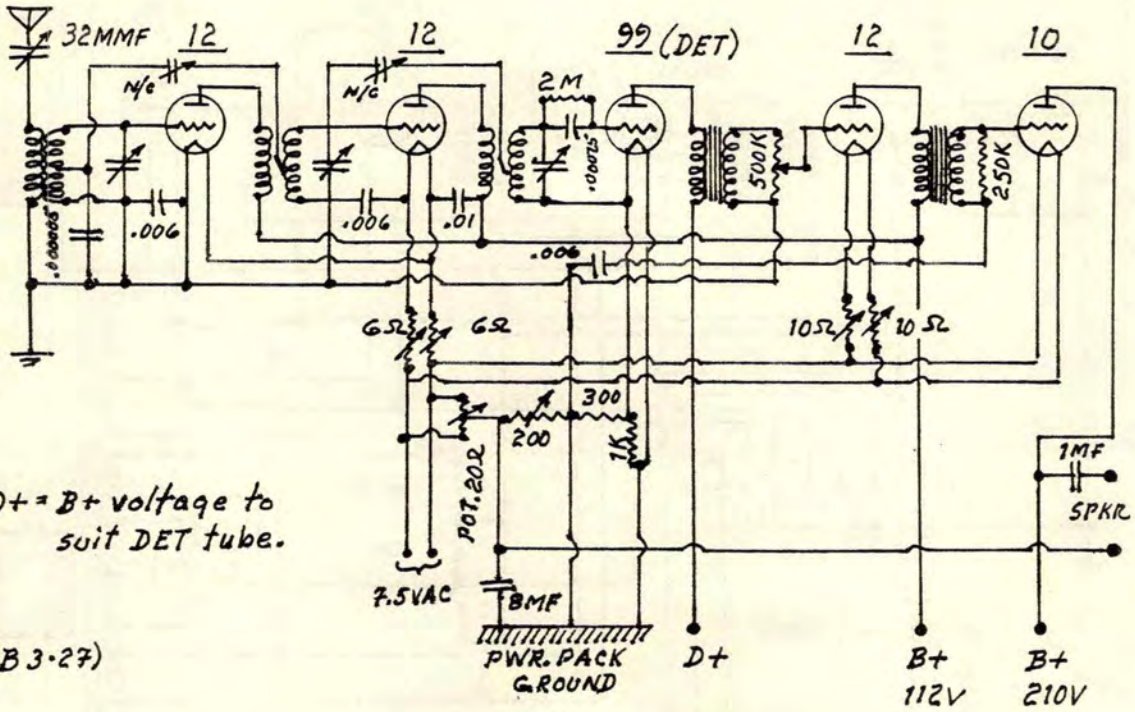

D+ = B+ voltage to suit DET tube.

(RB 3·27)

GENERAL RADIO TRF, 1926; Sht. 1

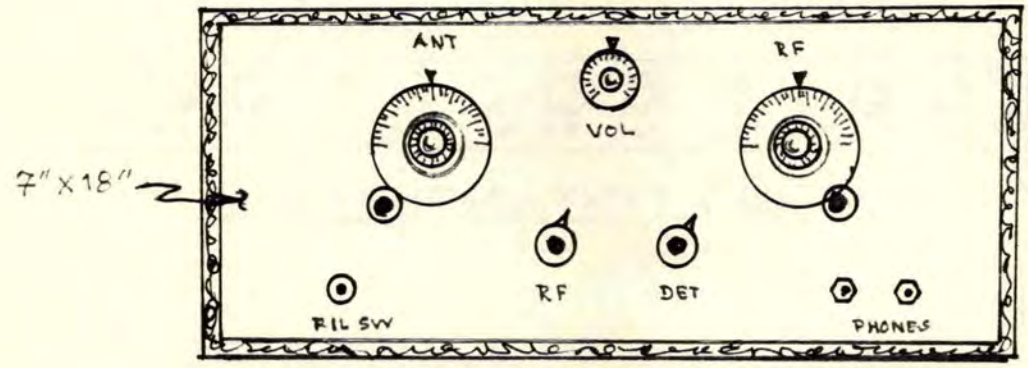

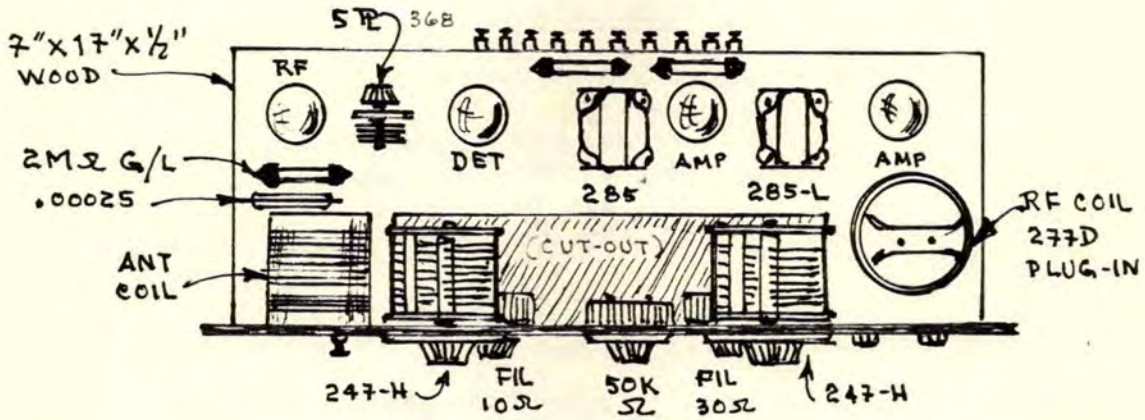

(NOS. ARE G.R. NOS.)

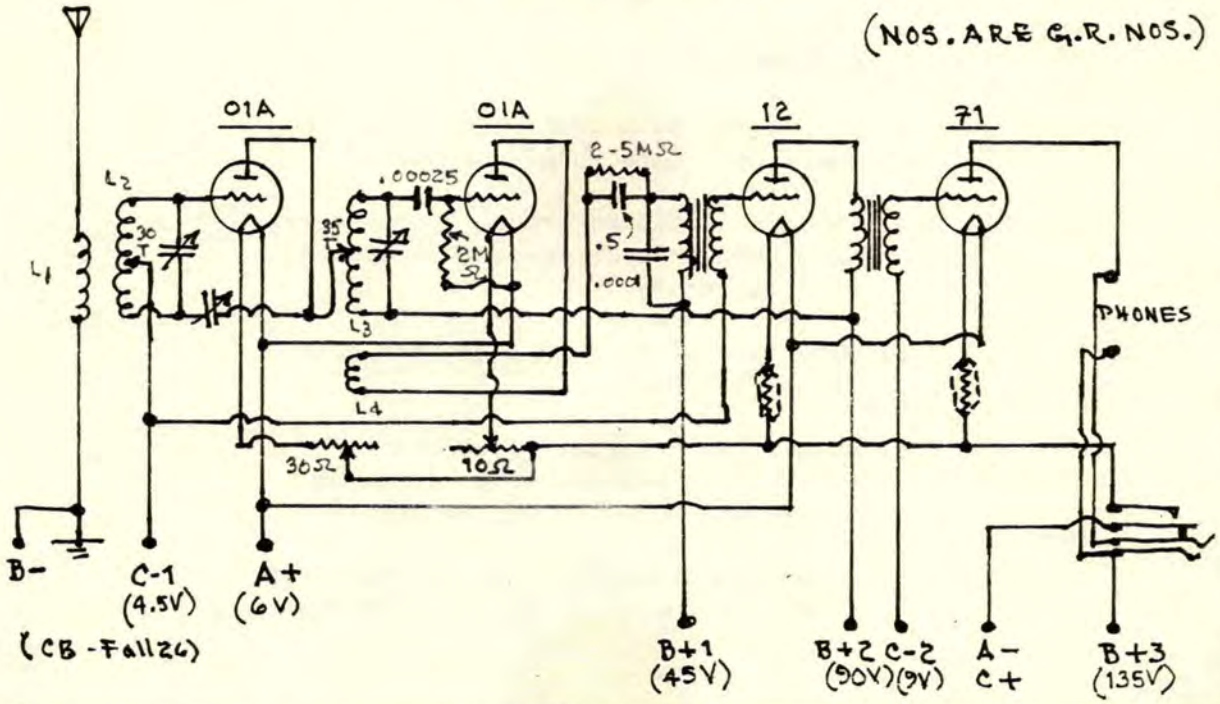

GENERAL RADIO TRF, 1926; Sht. 2

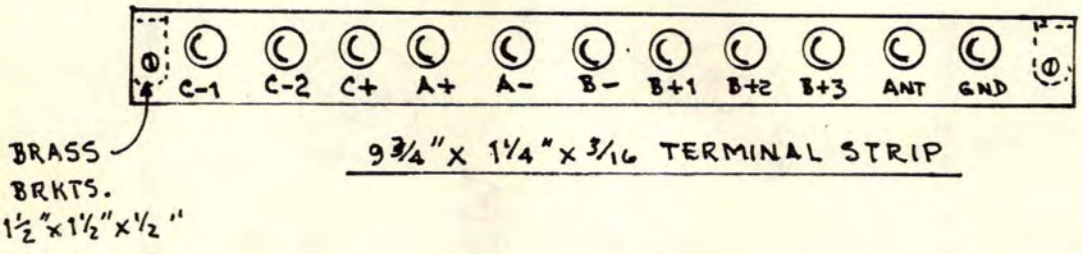

COIL DATA

Form = 2.75" Ø x 2.25" (2 Req.)

L1 = 15T #24 DSC; slipt over L2.
L2 = 59T, #24 DSC; tapt at 30T.
L3 = 59T, #24 DSC; tapt at 35T.
L4 = 15T, #24 DSC; slipt over end of L3.

NOTES

1. All wiring is below baseboard.
2. Seperate binding post for "C" and "B" voltages is mandatory.
3. If you do not use GEN-RAD coils, the above coil data should be used.
4. Tune in a station around 300 meters; vary the variable across L3 until a whistle occurs.
5. Tune the ANT coil variable for best signal strength.
6. Adjust the 5-plate variable until rocking the ANT variable causes no change in the pitch of the whistle.
7. Tune in another station, and vary the 50-K resistor until whistle disappears.

GREBE "SYNCHROPHASE" MU-1, 1925; 200-500 Meters

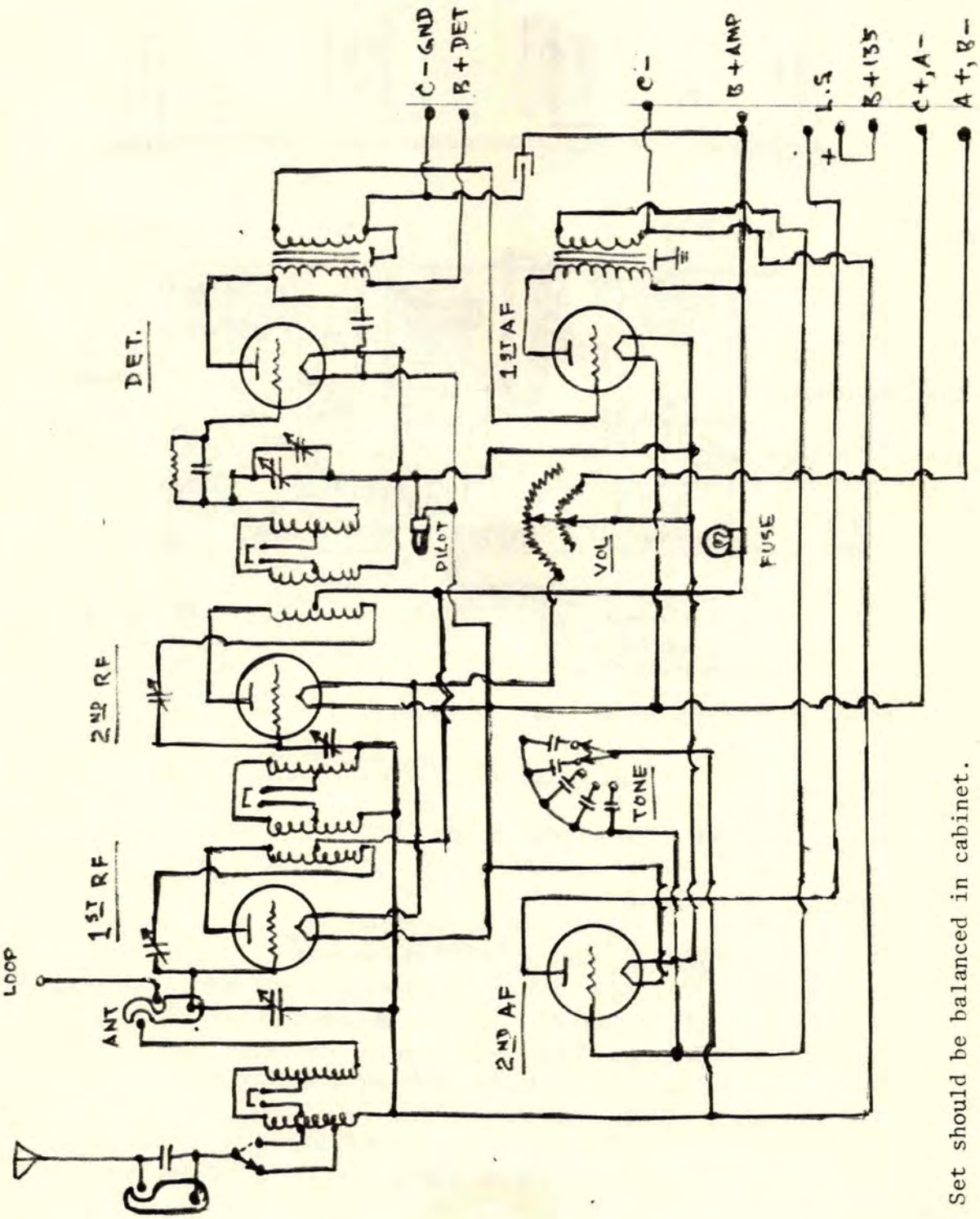

Set should be balanced in cabinet.
(RN 4-25/4-27)

GRIMES "OCTO-MATIC", 1927, Sht. 1

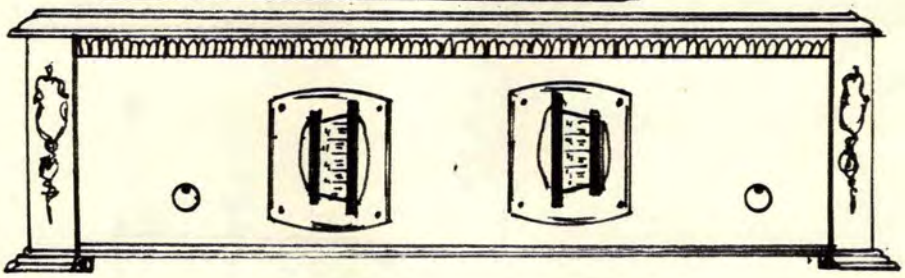

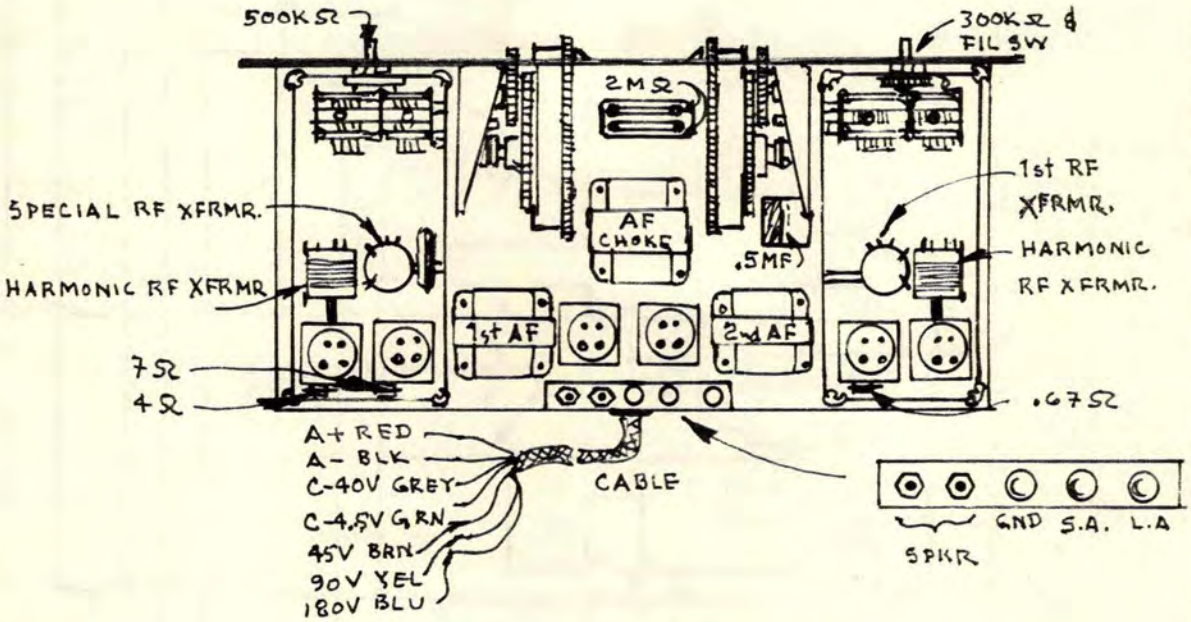

PRINCIPLE PARTS LIST

1. RGS Harmonic Wave Trap
2. " ANT Tuner Coil
3. " BC " "
4. " Harmonic Tuner Coil
5. RGS 9"x20"x 3/8" Baseboard
6. TYRMAN Single Vernier Drum Dials (2)
7. ALCO Al.Al. Shield Boxes (2)
8. DeJUR 350 mmf 2-gang Variable (2)
9. THORDARSON AF Xfrmrs. R-200 (2)
10. " Output Choke R-196
11. Resistance-Coupling AF unit (DeJUR/DAVEN)
12. LIGNOLE Panel, 7"x 21"x 3/16", Engraved

(CB 11-27)

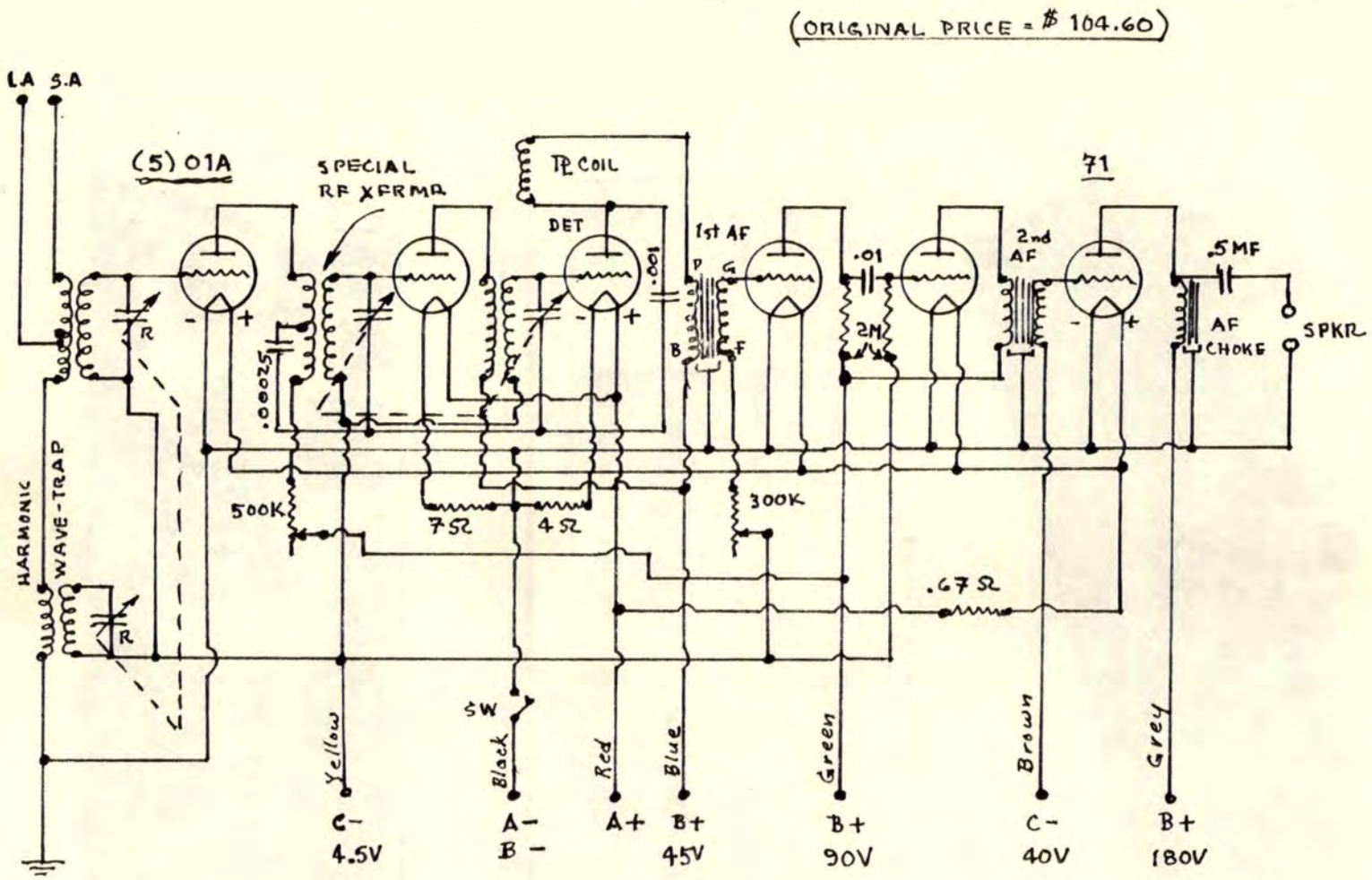

GRIMES "OCTO-MATIC", 1927; Sht. 2

NOTE: The special RF transformer, also called "Harmonic Tuning Coil", is tapt just off centre of the .00025 mfd condenser.

RSG = R.S.G. Mfg. Co., Staten Island: Grimes was an officer, before setting up his own shop.

GRIMES DC "NEW YORKER", 1929
Sht. 1

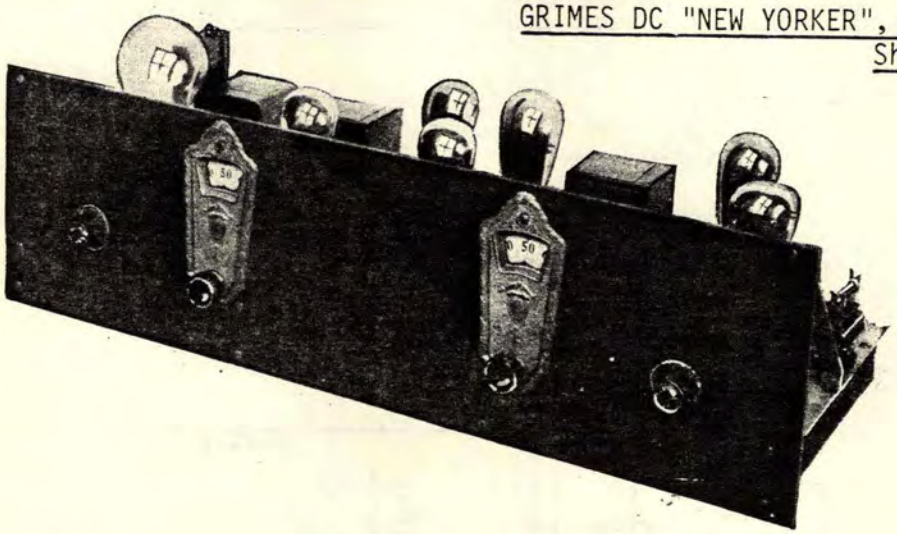

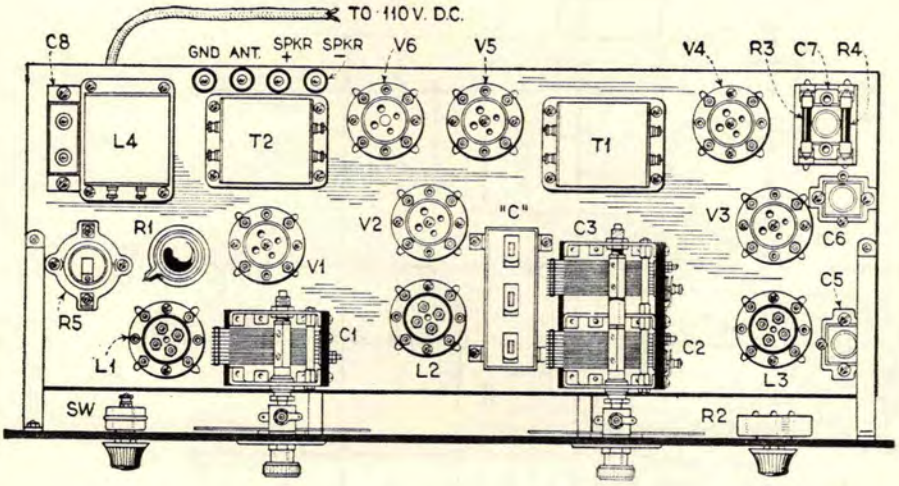

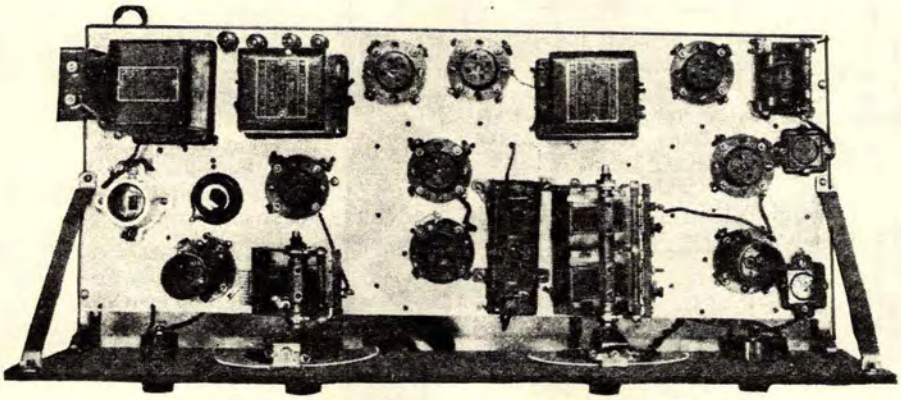

GRIMES DC "NEW YORKER", 1929; Sht. 2

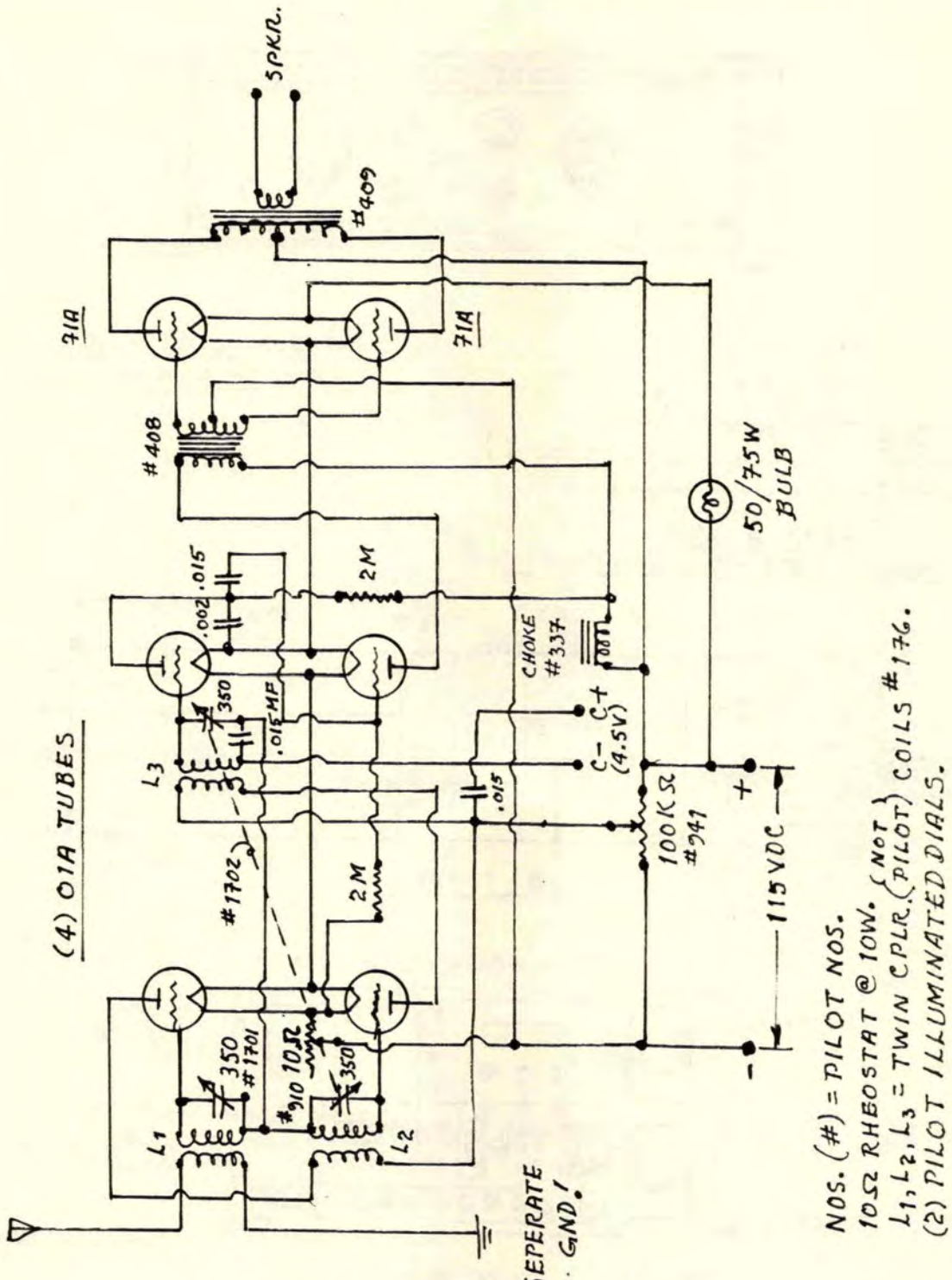

HAGERMAN 210 AC-SIX, 1928; Sht. 1

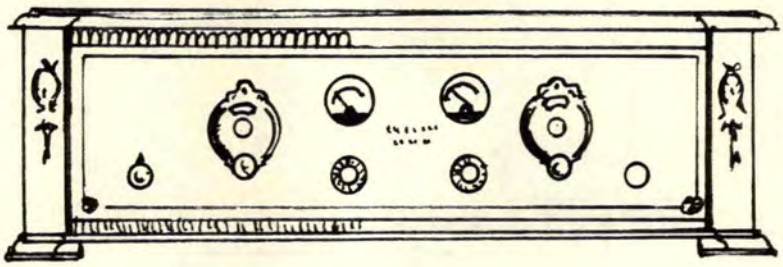

SEE SHT. 2 FOR RCVR. SCHEMATIC & LAYOUT.

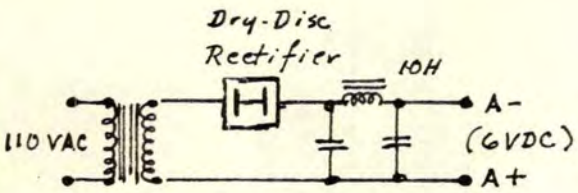

ABOX "A" UNIT

NOTE: 200K MFD Filter Capacity!

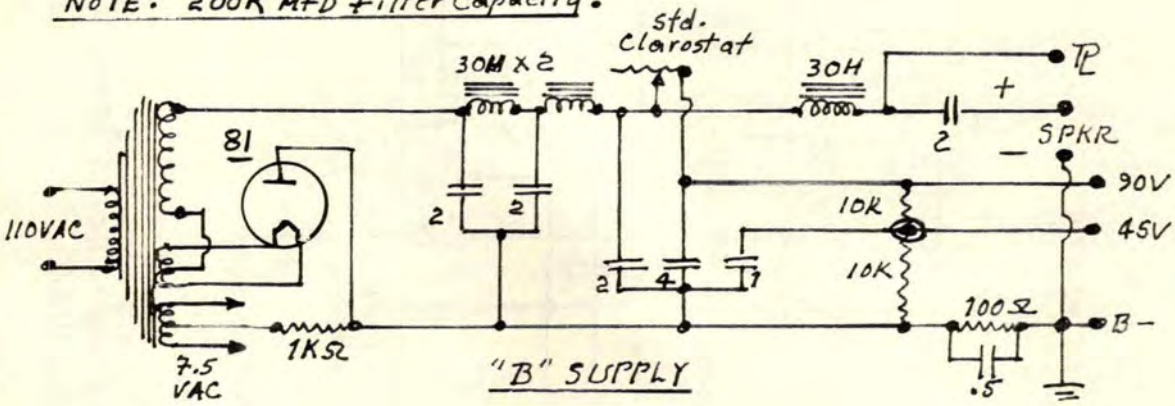

"B" SUPPLY

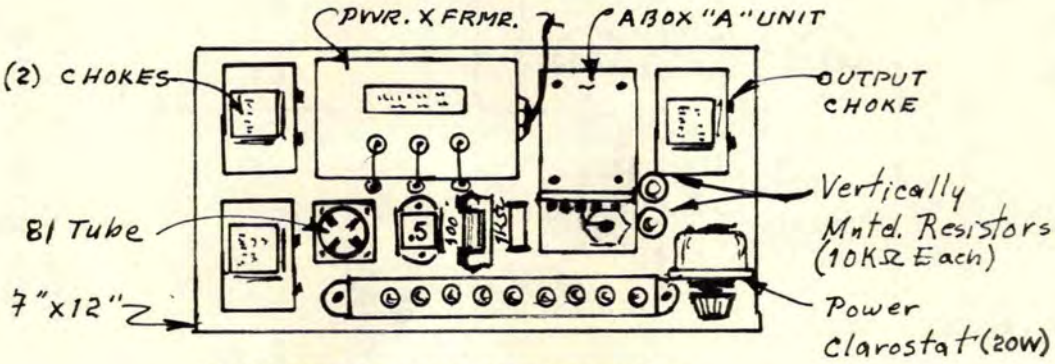

"B" POWER SUPPLY DERIVED FROM THORDARSON R-210 PWR. COMPACT (q.v.)

(CB 3-28)

HAGERMAN 210 AC-SIX, 1928; Sht. 2

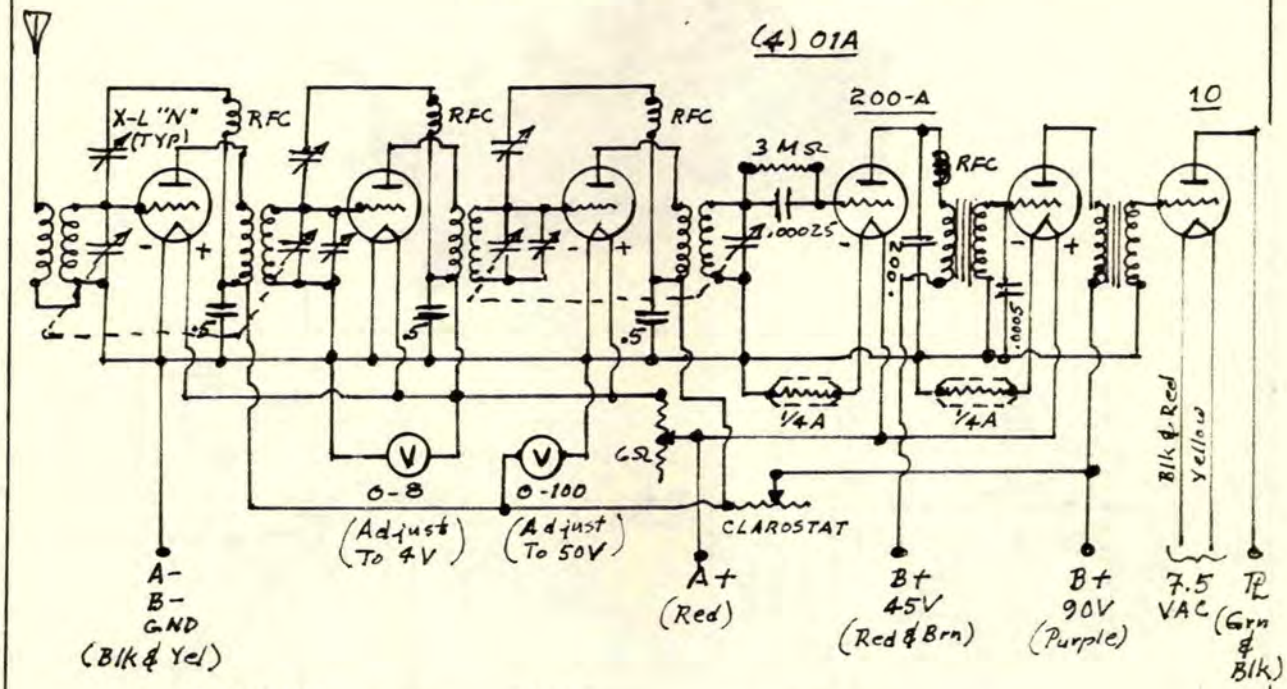

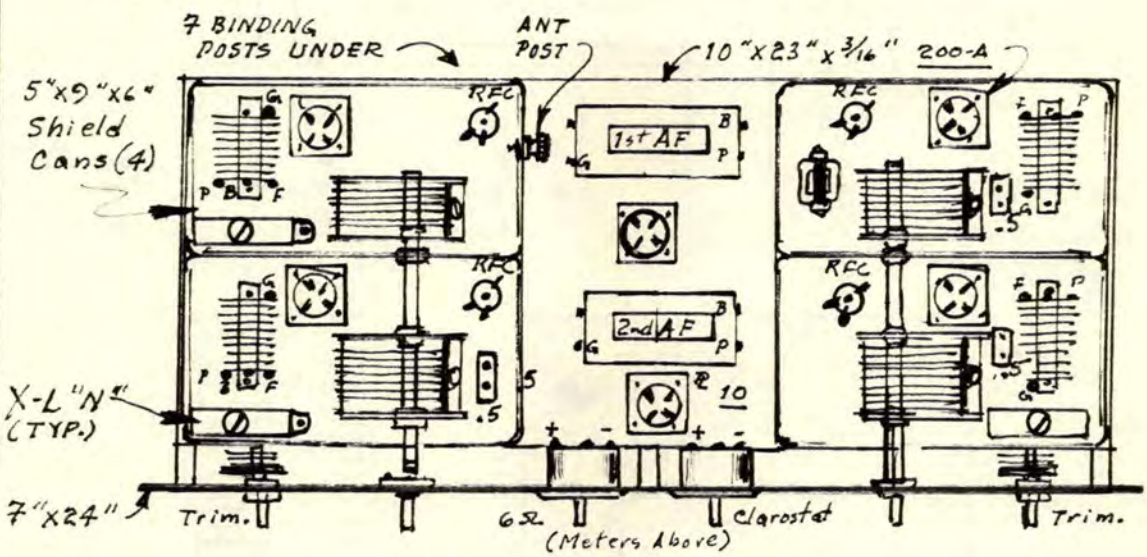

PLAN VIEW of BASE

.002
.0005
(2) Ameperites } Underside of Base

PRINCIPLE PARTS

(3) Sub-Panel Brkts. (Karas)
Meters = Jewell 135
(4) Karas Type 17 Variables (370)
(2) Karas Type 28 AF Xfrmrs.
(4) RFC = Hammarlund 85 mH
(3) X-L Variodensers "N" Type
(2) Nat'l. Illuminated Dials
(2) Hammarlund Midget Variables

HALLDORSON SCREEN-GRID 56, 1929

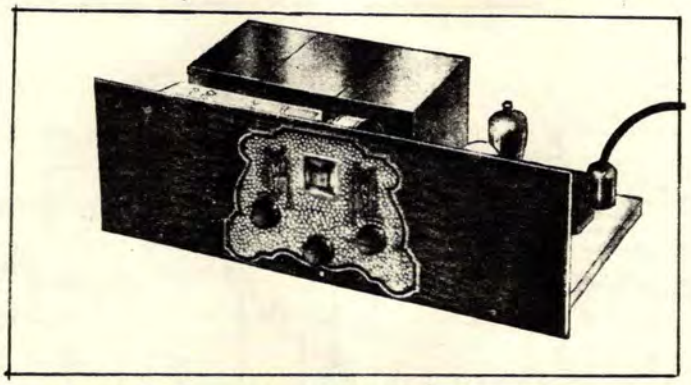

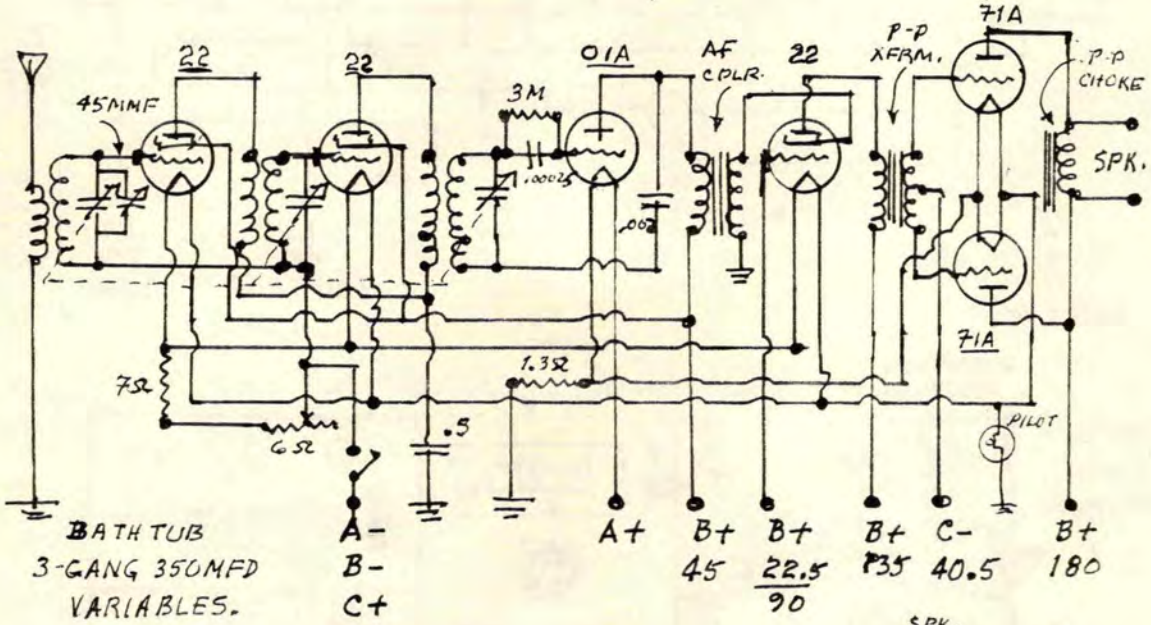

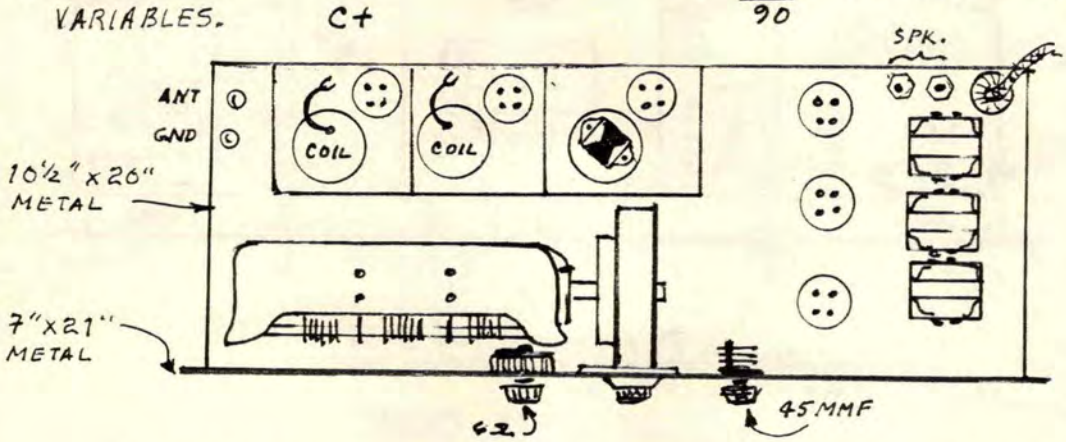

HALLDORSON RF XFRMRS., AF XFRMRS., POSTS & JACKS.

(CB Fall 28)

HAYNES DX-2 MULTI-VALVE RECEIVER, 1927

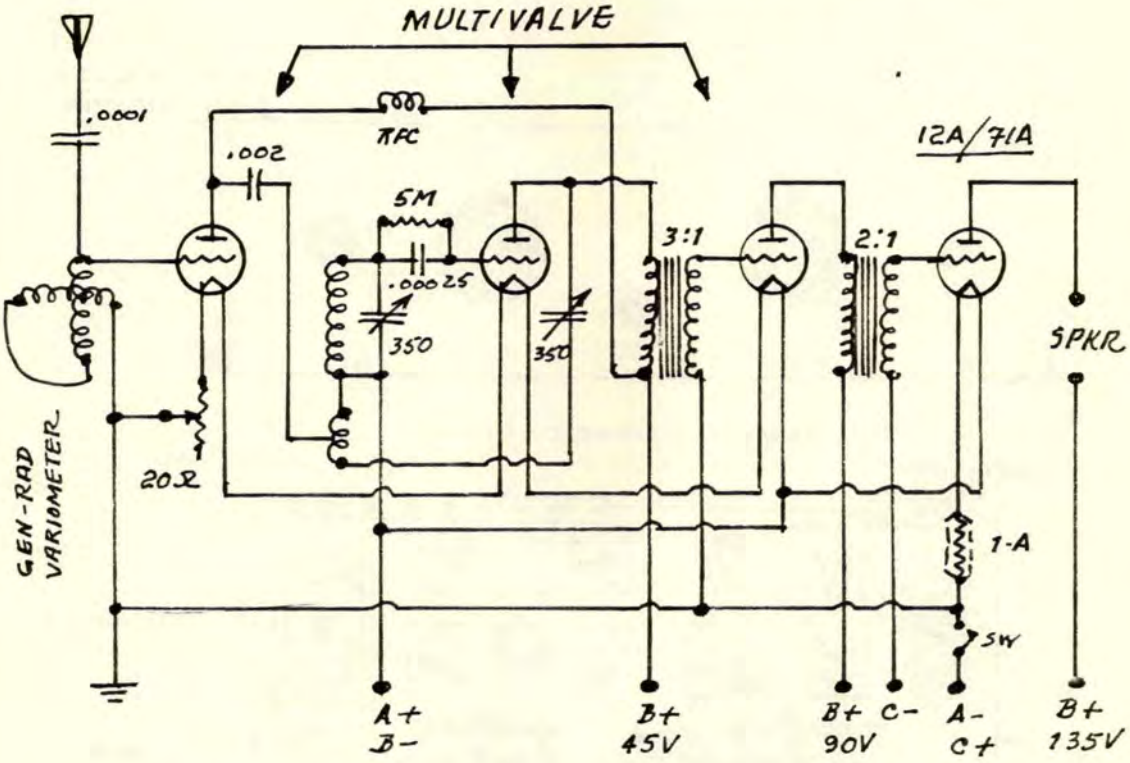

RFC = 300T, #28/30 DSC (wound on a Sewing Thread spool)
PANEL = 7"x17"x3/16" Formica.
BASEBOARD = 7"x17"x½".

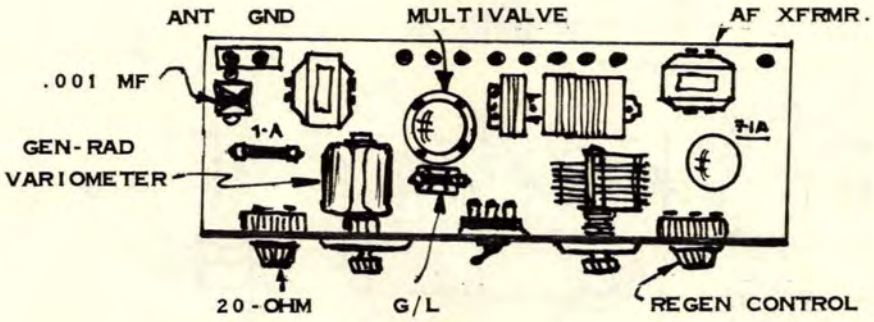

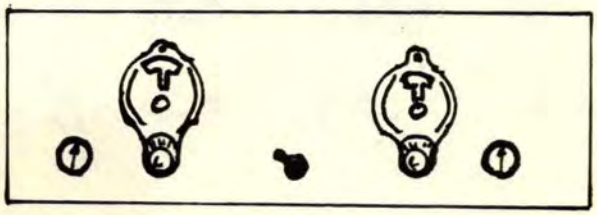

(CB 3-27)

HAYDEN DX-FOUR, 1927

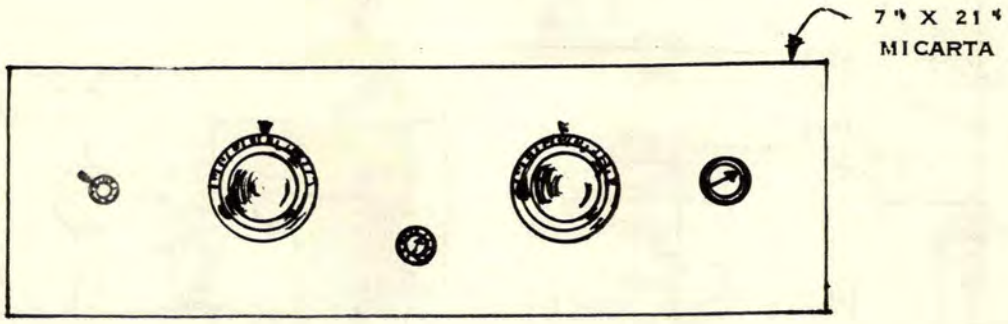

KARAS "MICROMATIC" DIALS

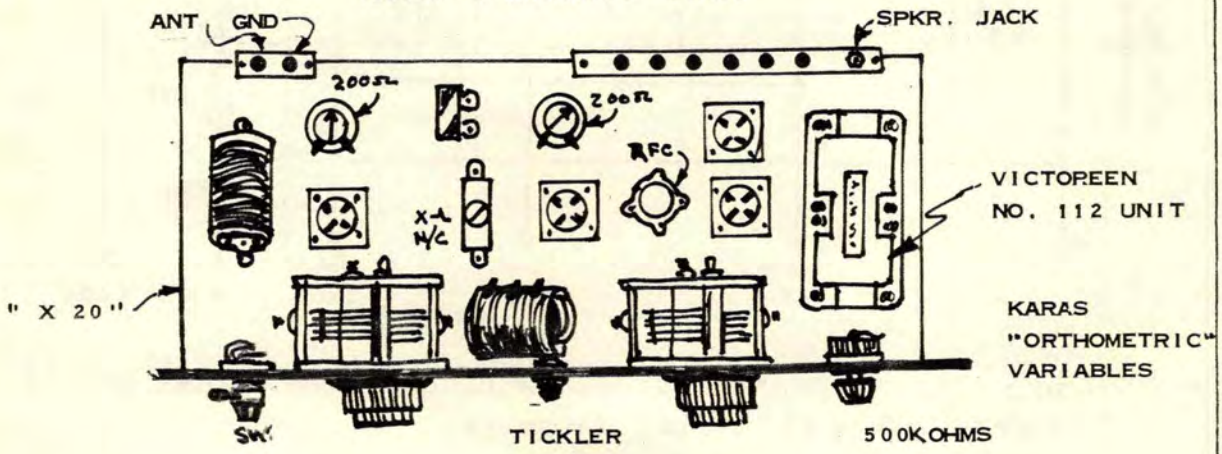

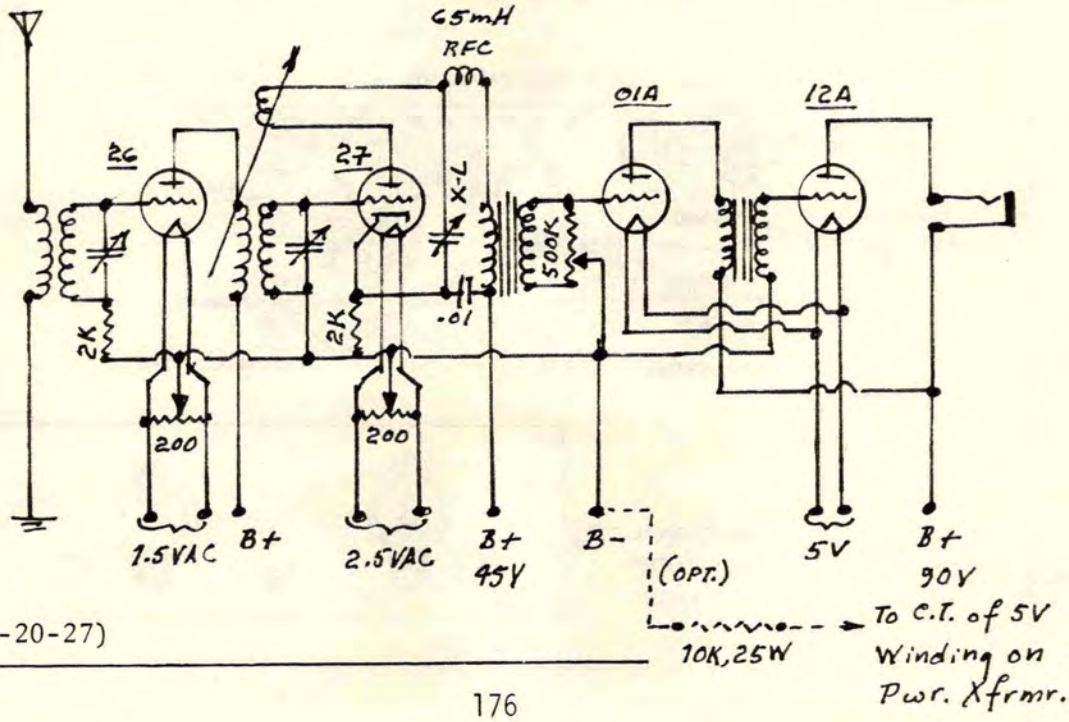

(RW 8-20-27)

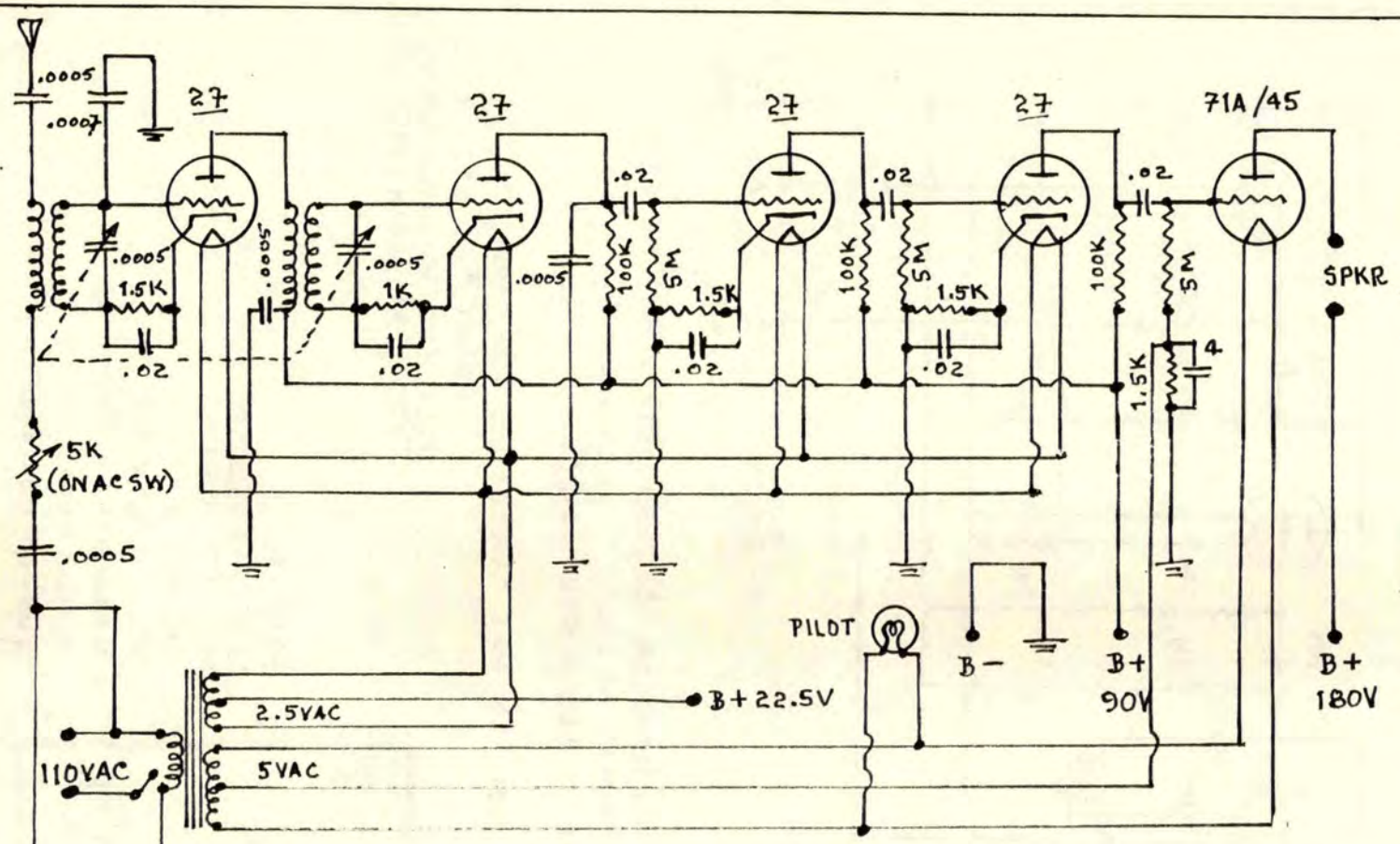

1. National "Velvet B", Type 3580 Power Unit.
2. Aluminum chassis is GND.
3. Panel = 7" x 24".
4. Base (Chassis) = 11" x 23" x 2".
5. If squeals occur, insert grid-suppressor and an 800-ohm resistor at 1st Grid of the 1st Tube.

HAYDEN AC-4 RECEIVER, 1929

HAYDEN "MIDGET" PORTABLE, 1929

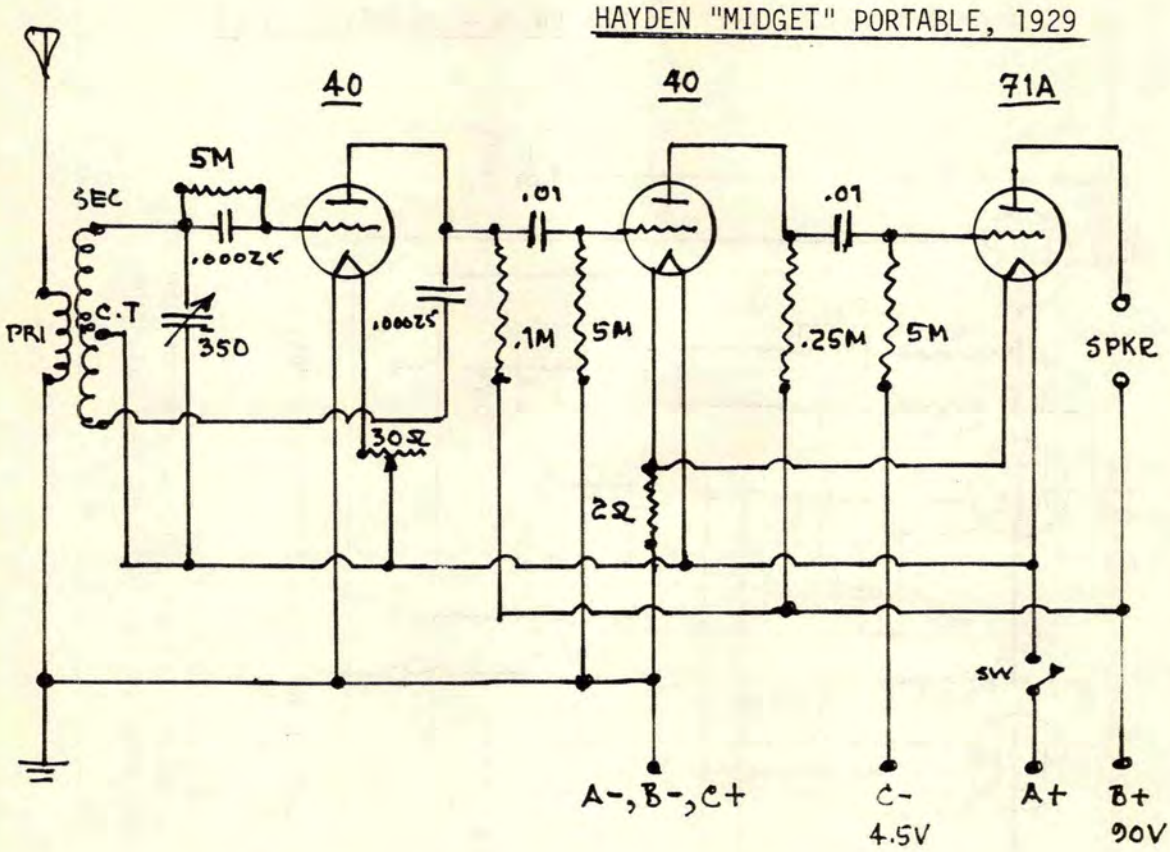

SWITCH MOUNTED ON 30Ω RHEOSTAT.
01A TUBES MAY BE USED, w/ LESS VOLUME.
ORIGINAL TUBES WERE "KELLY".

TUNING COIL, IN ANT CIRCUIT, = 1"Ø FORM
200T #30 SSC, C.T.
PRI = 40T, WOUND OVER SEC,
w/ FISHSKIN INBETWEEN.

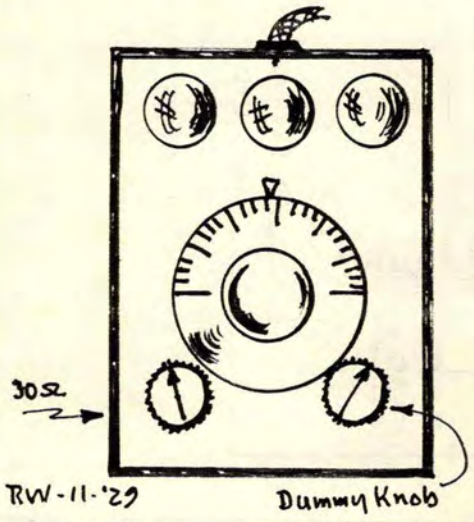

ORIGINAL
CONFIGURATION ~
BAKELITE PANEL;
WALNUT BOX.
5½" x 7¾" x 3"
(Need not be followed;
breadboarding is
just as efficient.)

H.B. "COMPACT", 1929

(SHT. 1)

O/A = 9½" x 15" x 7"

AC & BATTERY MODELS IDENTICAL IN CONFIGURATIONS, EXCEPT FOR PWR. XFRMR. IN CENTRE OF AC MODEL.

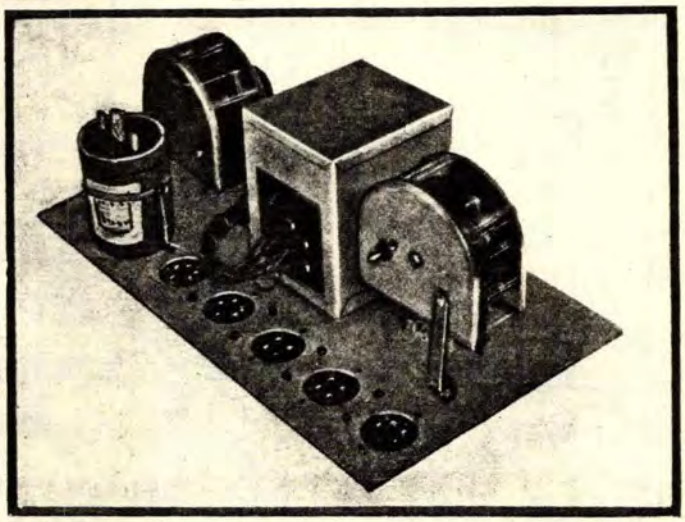

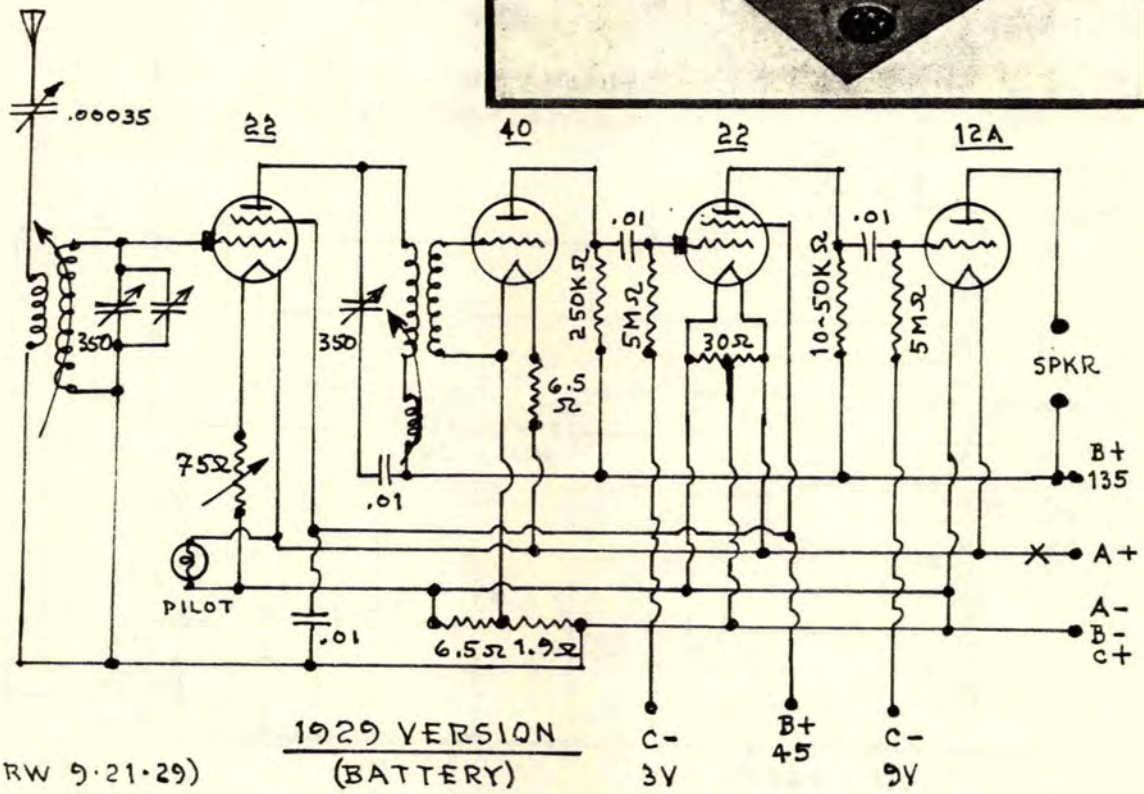

1929 VERSION
(BATTERY)

(RW 9·21·29)

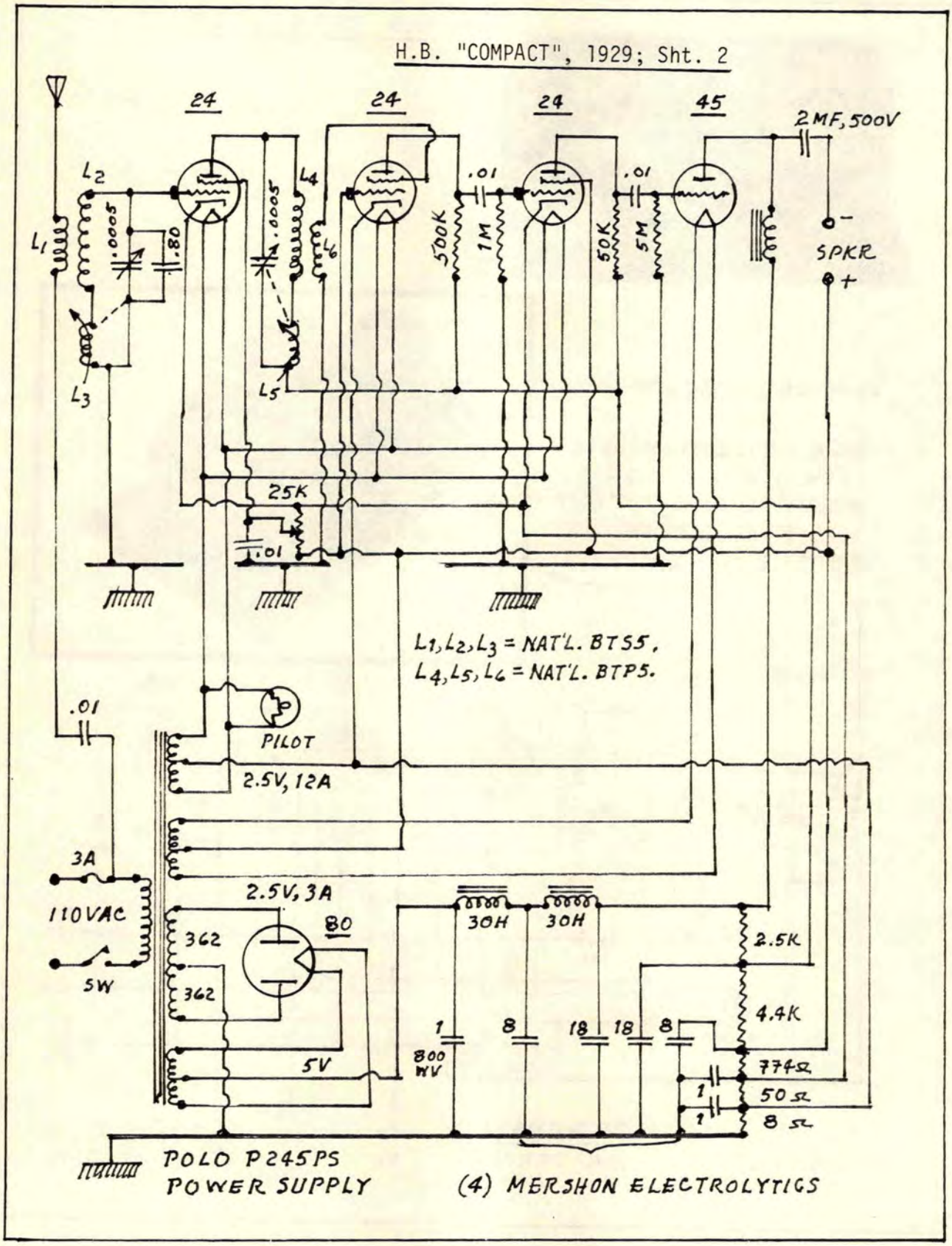
H.B. "COMPACT", 1929; Sht. 2
24
24
24
45
2 MF, 500V
L2
L1
.0005
.80
.0005
L4
L6
L3
L5
.01
500K
1M
.01
50K
5M
SPKR
-
+
25K
.01
L1, L2, L3 = NAT'L. BT55,
L4, L5, L6 = NAT'L. BTP5.
.01
PILOT
2.5V, 12A
3A
110VAC
SW
2.5V, 3A
80
362
362
5V
30H
30H
2.5K
4.4K
1
800 MV
8
18
18
8
774Ω
1
50Ω
1
8Ω
POLO P245PS
POWER SUPPLY
(4) MERSHON ELECTROLYTICS

HARKNESS SCREEN-GRID "DeLUXE" RECEIVER, 1929; Sht. 1

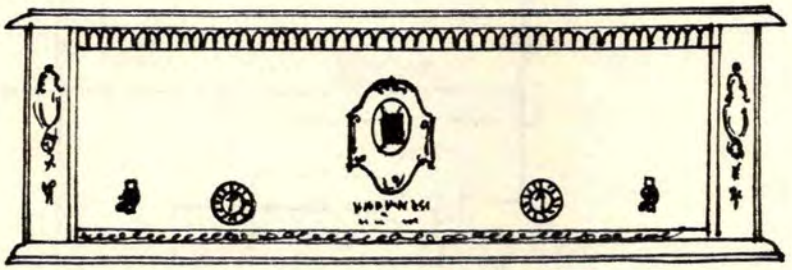

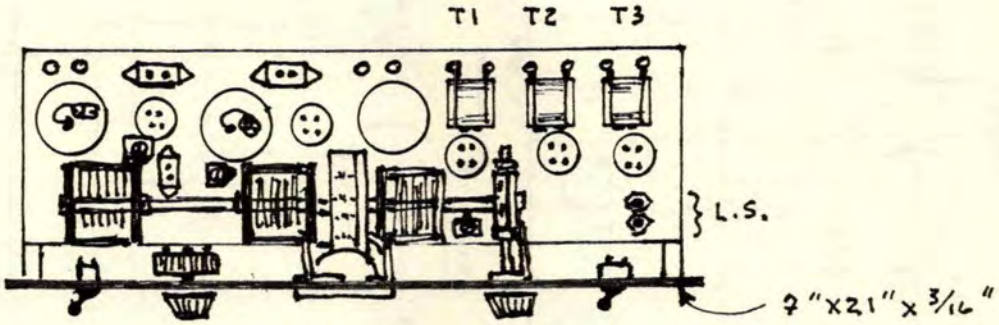

PLAN VIEW

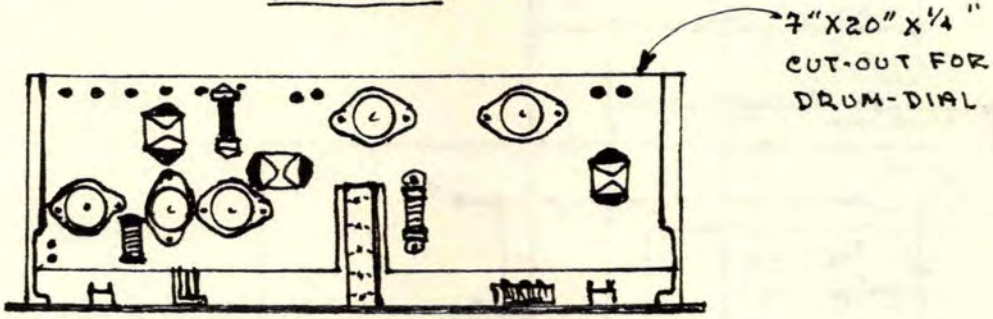

BOTTOM VIEW

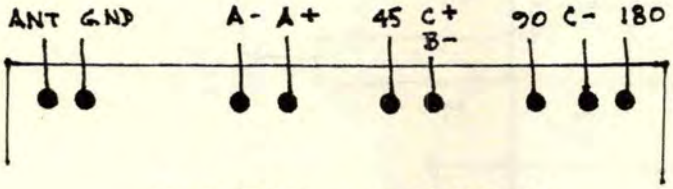

BATTERY CONNEXIONS

(CB 1-29)

HARKNESS SCREEN-GRID "DeLUXE" RECEIVER, 1929; Sht. 2

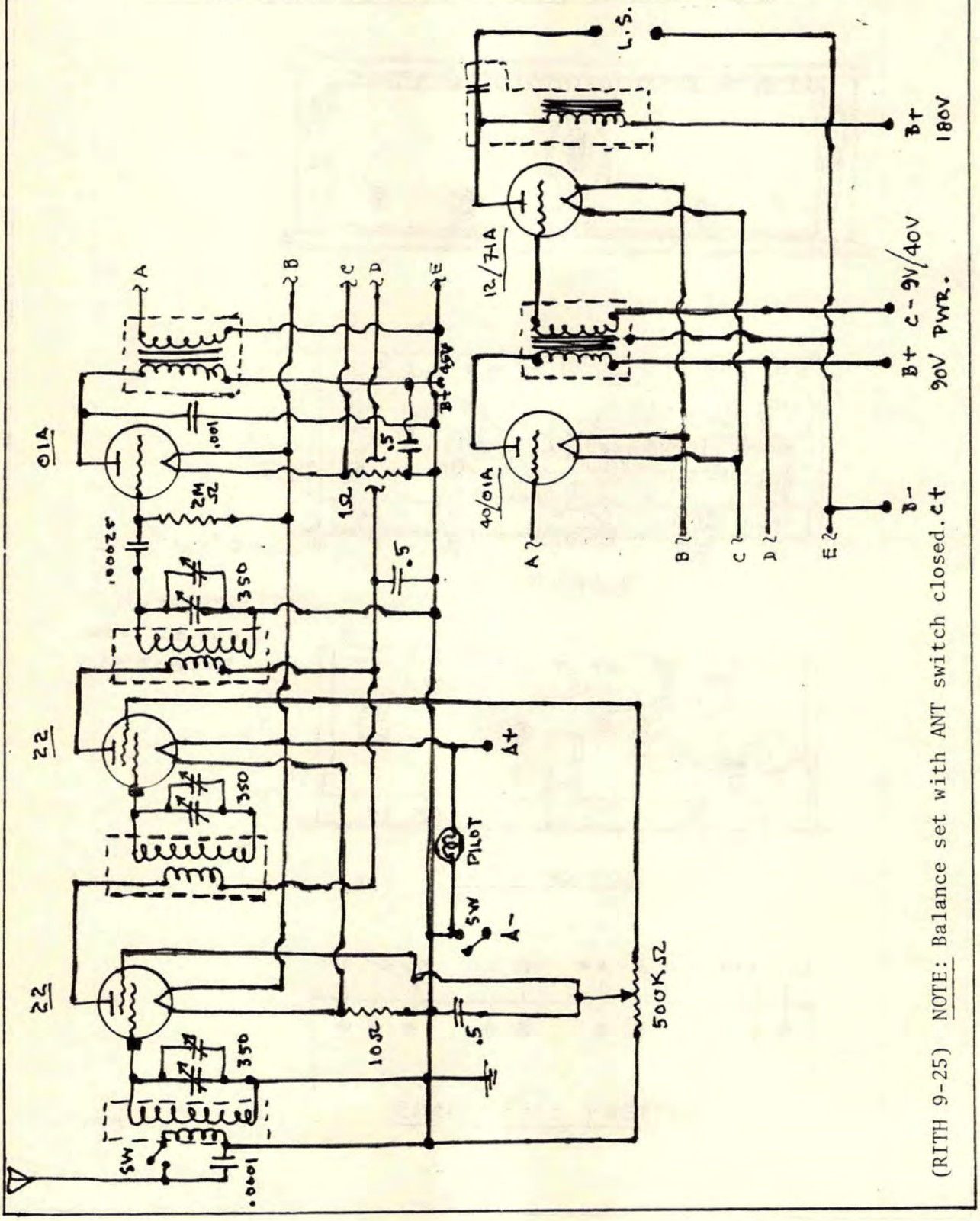

(RITH 9-25) NOTE: Balance set with ANT switch closed.

A.F.HENNINGER "SIX" TRF, 1926

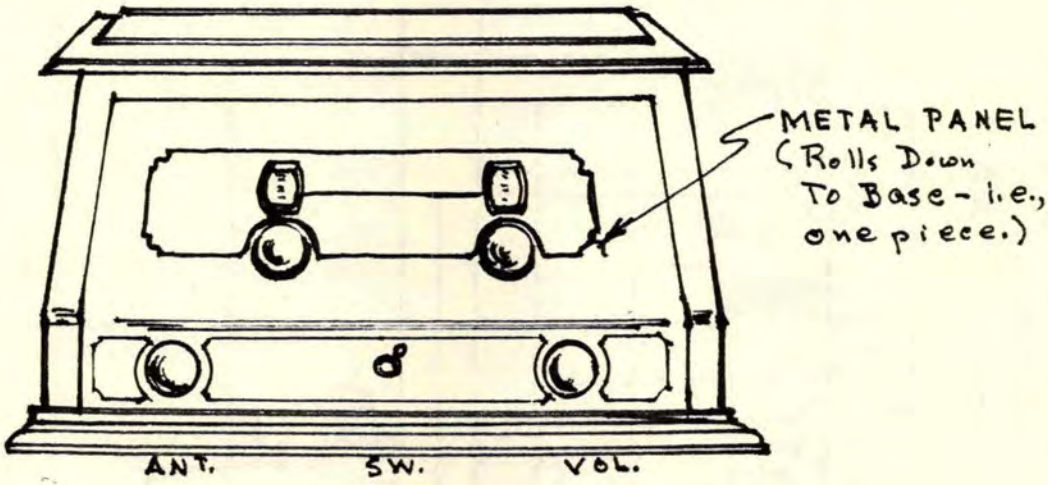

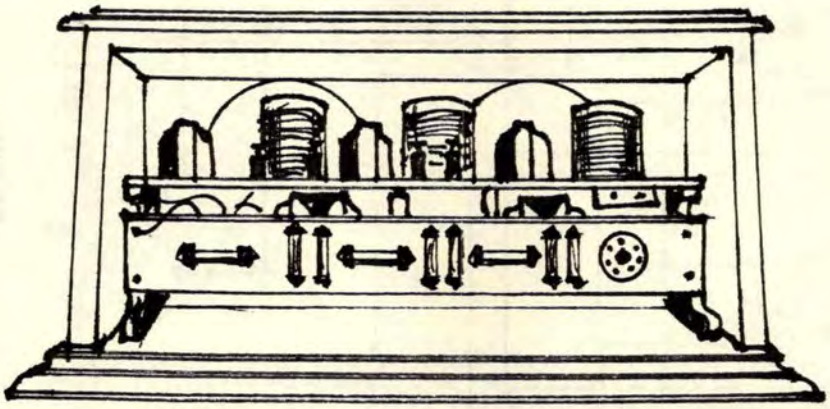

2 STAGES T.R.F.
DETECTOR
3 STAGES R-C AF AMPLIFICATION
3 INDUCTANCES = D-COIL TYPE, q.v.
SUB-PANEL MOUNTED SOCKETS
3 VARIABLES; ONE TANDEM (R.H.)
(4) BINDING POSTS

2-TONE MAHOGANY
CABINET

(RN 8-26)

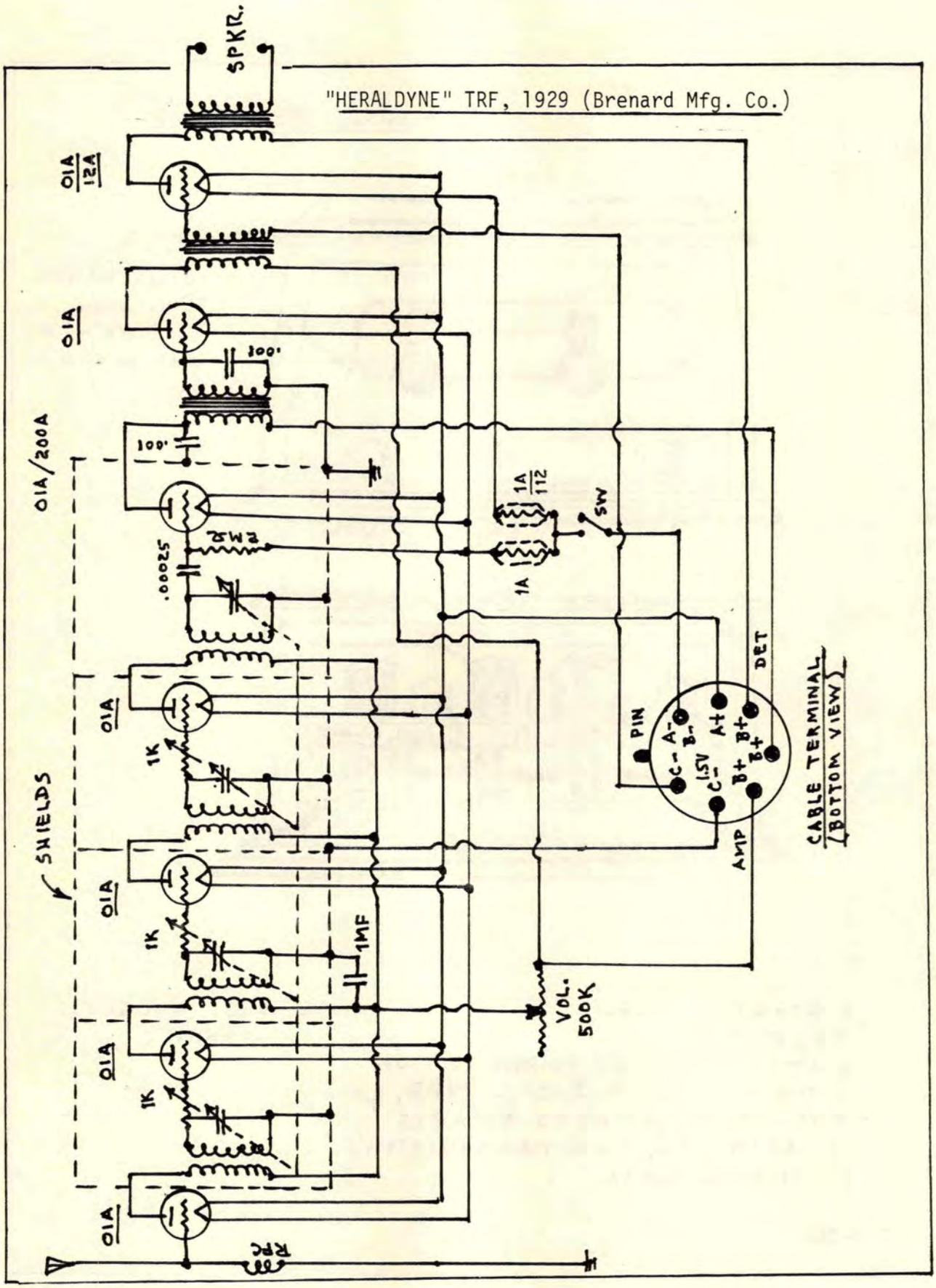
"HERALDYNE" TRF, 1929 (Brenard Mfg. Co.)
SPKR.
01A/12A
01A
01A/200A
.001
.001
2MΩ
.00025
1A/112
1A
SW
01A
1K
01A
1K
SHIELDS
01A
1K
01A
1MF
VOL. 500K
RFC
PIN
C- A-
B-
A+
C-
1.5V
B+ B+
B+
AMP
DET
CABLE TERMINAL
(BOTTOM VIEW)

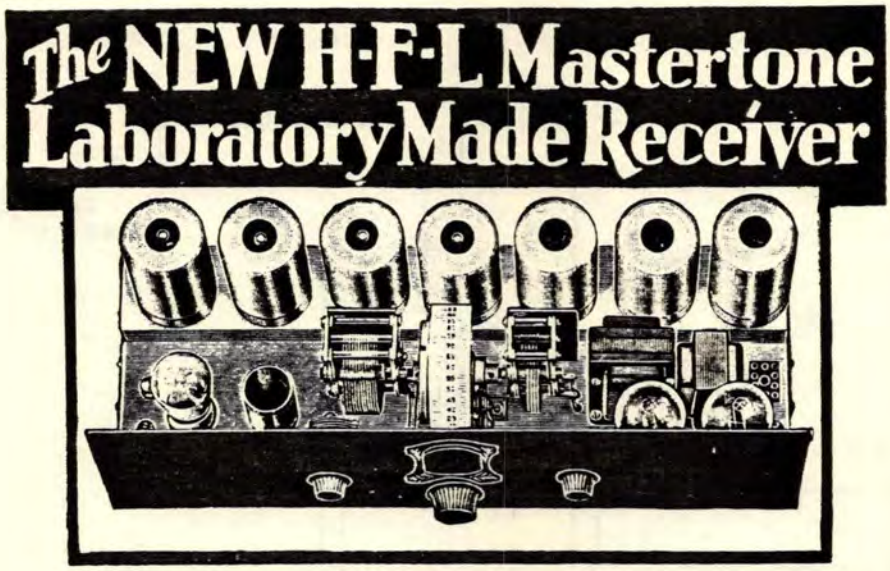

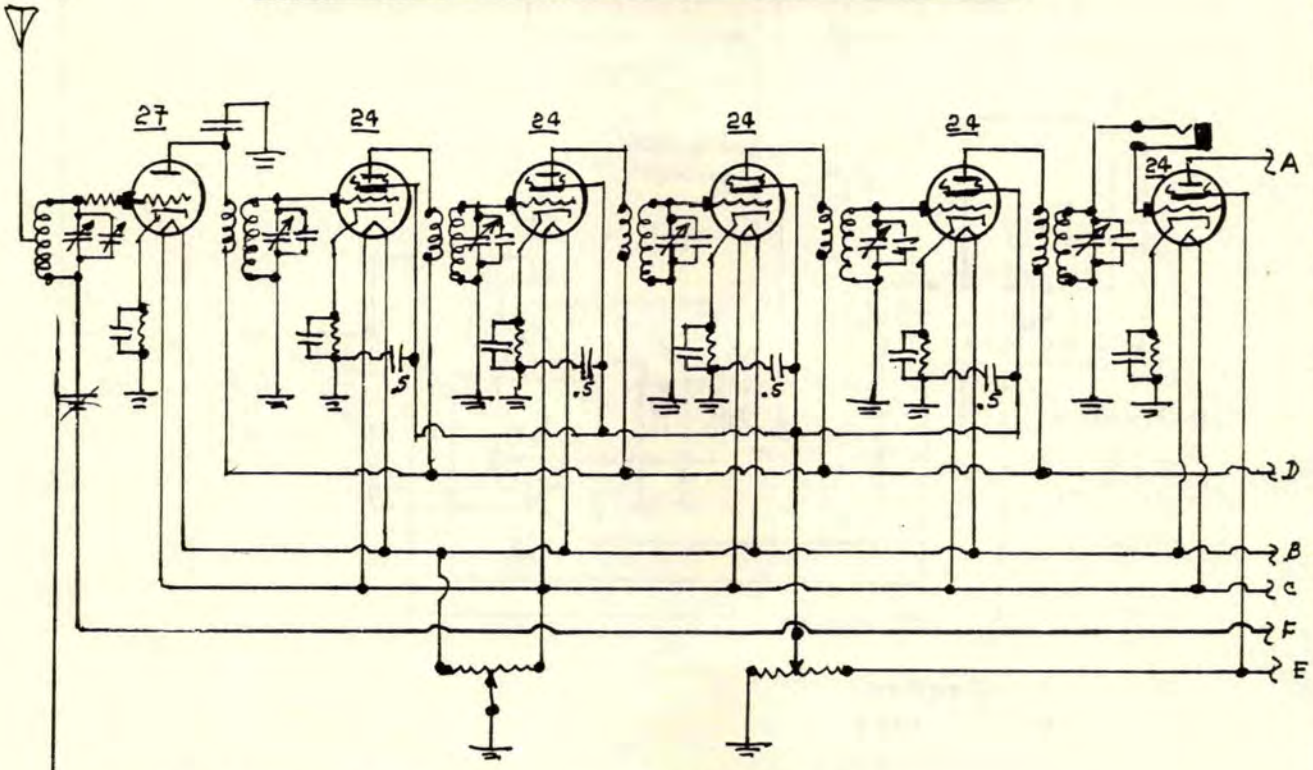

All GND symbols indicate grounds to shields.

(Sht.1)

H*F*L "MASTERTONE" TRF, 1928; Sht. 2

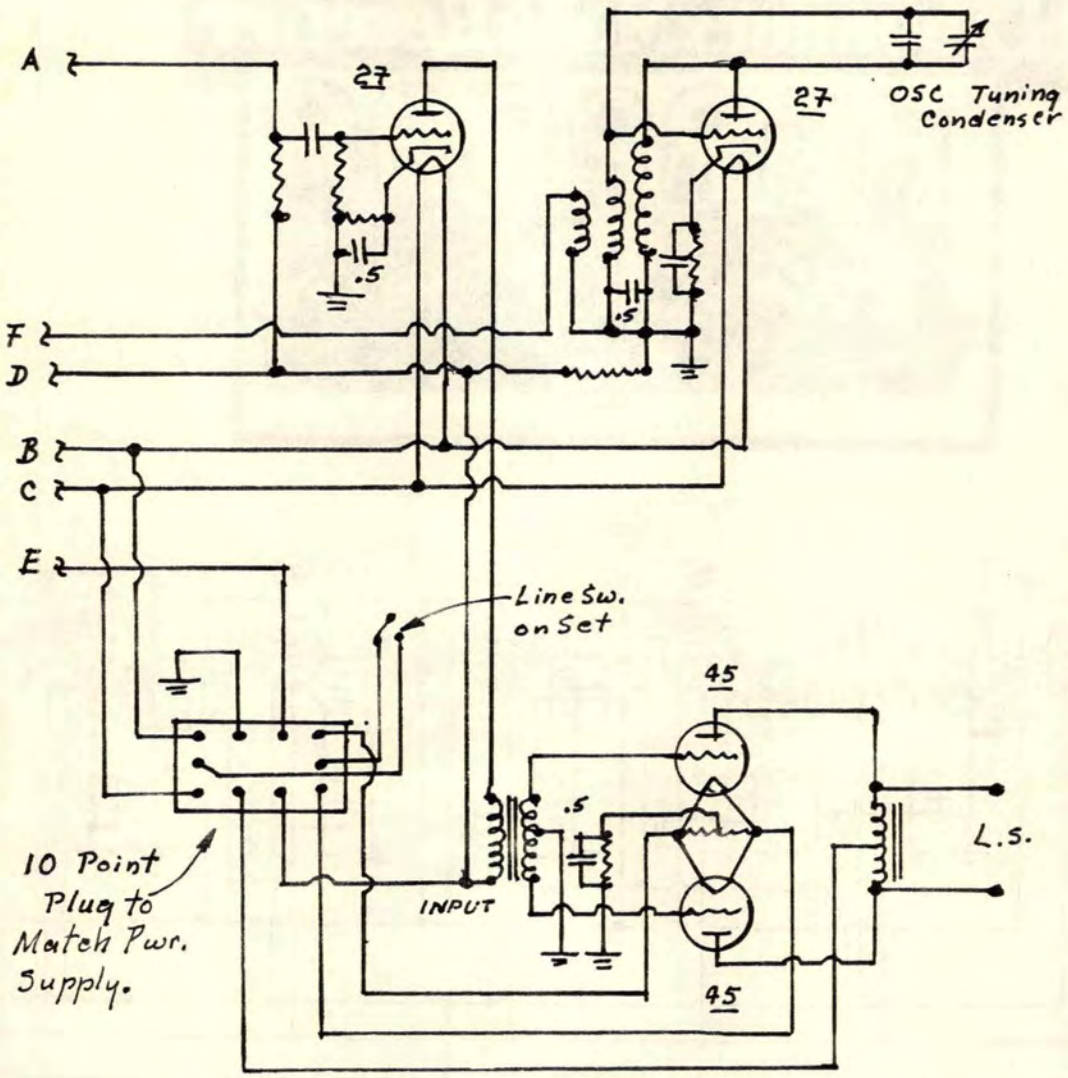

2 Detectors.
4 IF Stages.
2 AF Stages.
Oscillator.

KARAS AC "EQUAMATIC", 1928; Sht. 1

While the AC "Equamatic" was merely an electrified version of the battery-operated "Equamatic", it turned out to be a much better thought-out design. In the two cuts shown below comparison may may be made as to the physical differences, also the obvious similarity of components used.

However, if you have the battery-operated "Equamatic" it is a simple matter to electrify it without changing anything basic to the design. The KARAS Control System may be ignored, as it merely offered a dubious convenience.

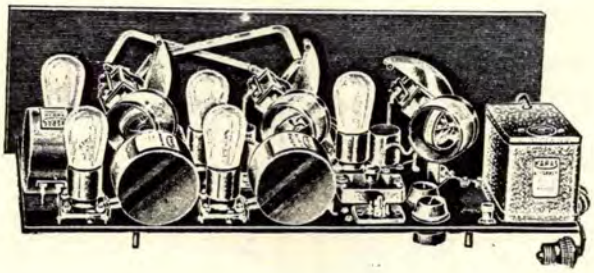

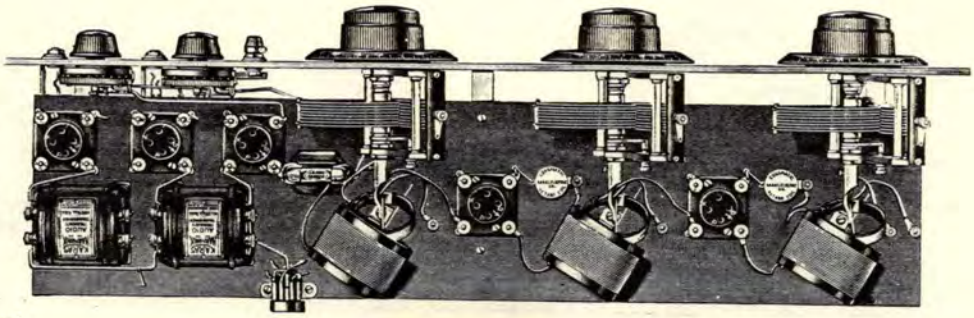

(RW 2·11·28)

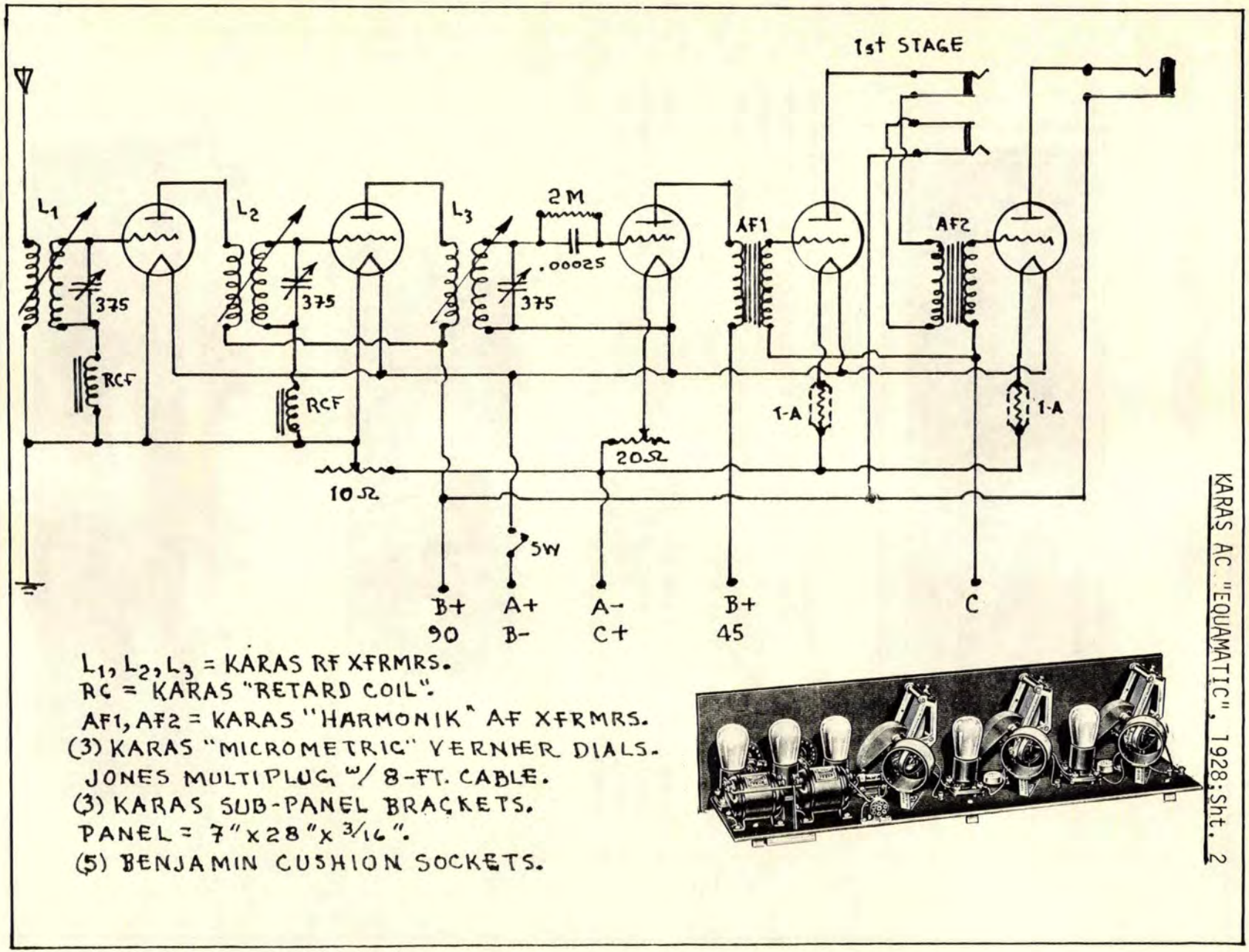

KARAS AC "EQUAMATIC", 1928; Sht. 2

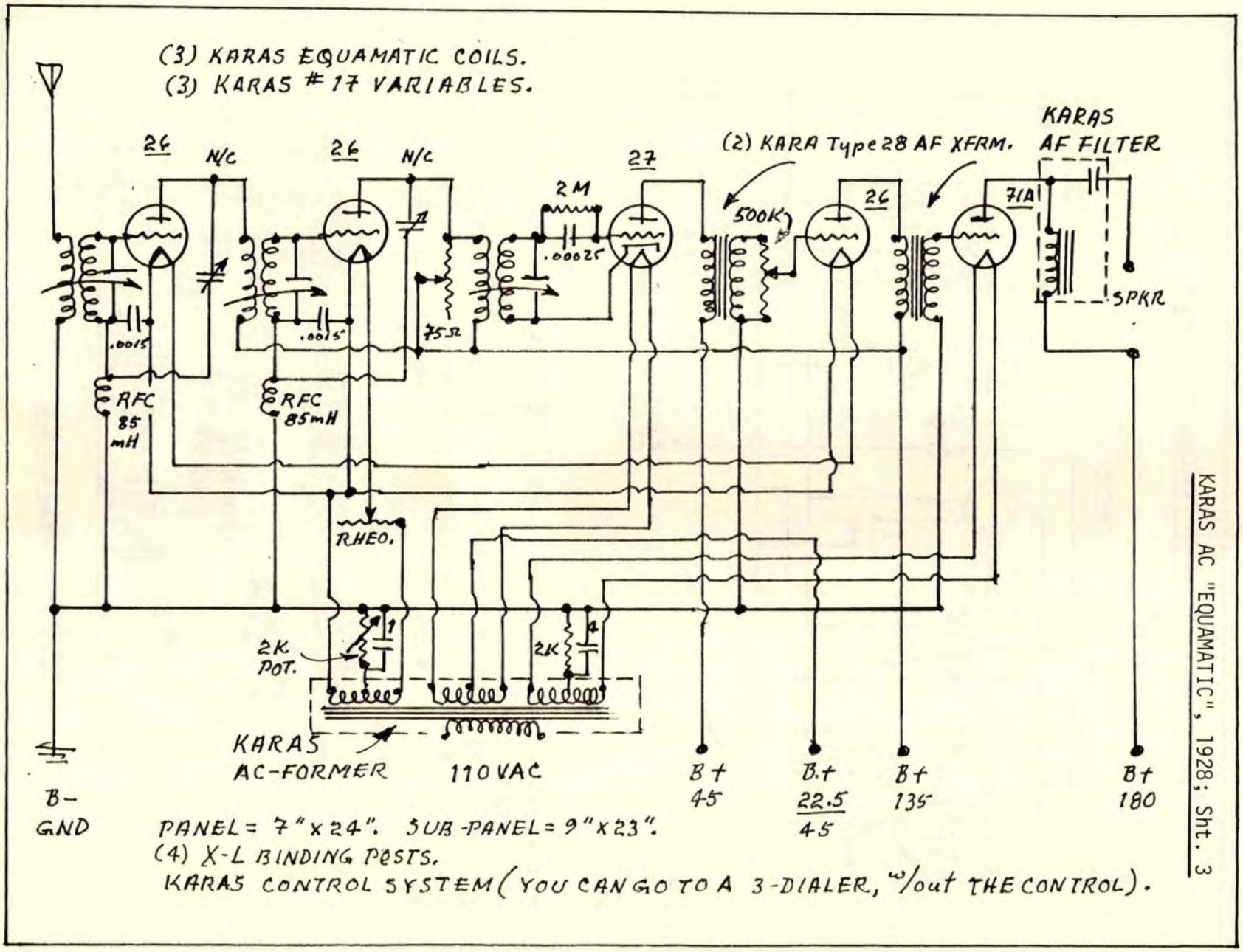

KARAS AC "EQUAMATIC", 1928; Sht. 3

KARAS "KNICKERBOCKER FOUR", 1927

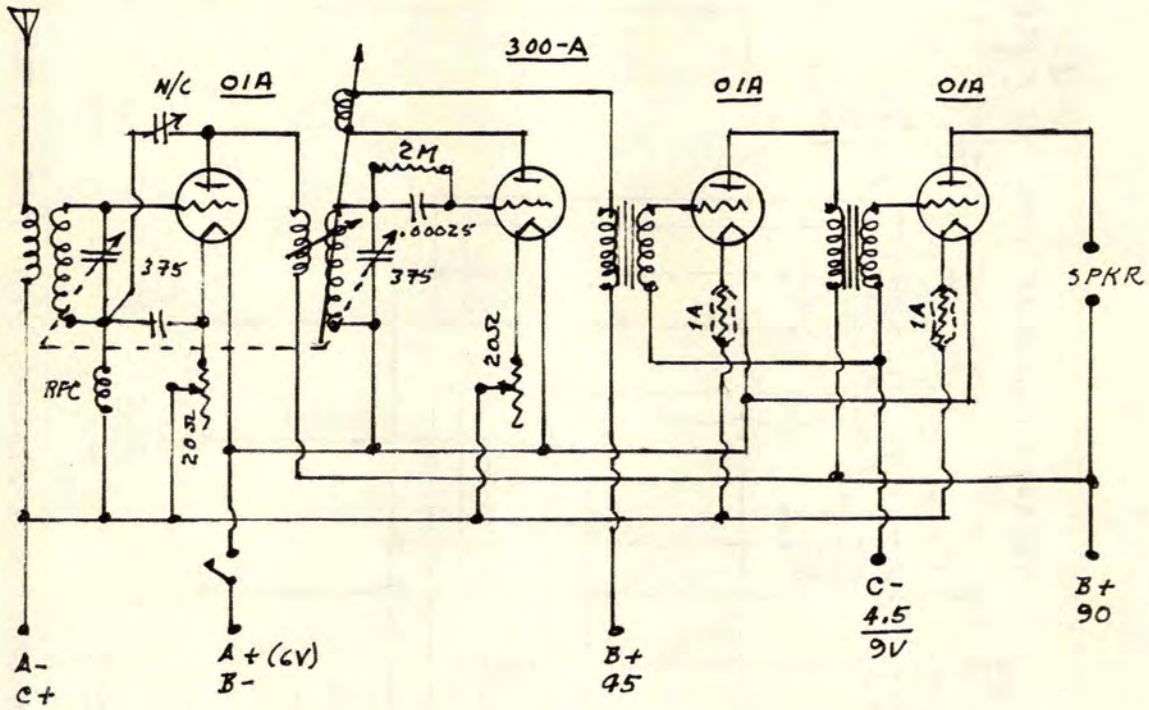

T2 = KARAS 3-CIRCUIT TUNER
T1 = KARAS INDUCTANCE
(2) VARIABLES ~ KARAS 370 MMF
FIL. SW. = YAXLEY #10 MIDGET
X-L ANT. BINDING POST (1)

(2) KARAS "Harmonik" AF XFRMS
(2) TIP JACKS (SPKR.)
PANEL = 7" X 18" X 3/16" FORMICA
SUB-PNL. = 7" X 17" X 3/16" "
(2) KARAS SUB-PNL. BRKTS.

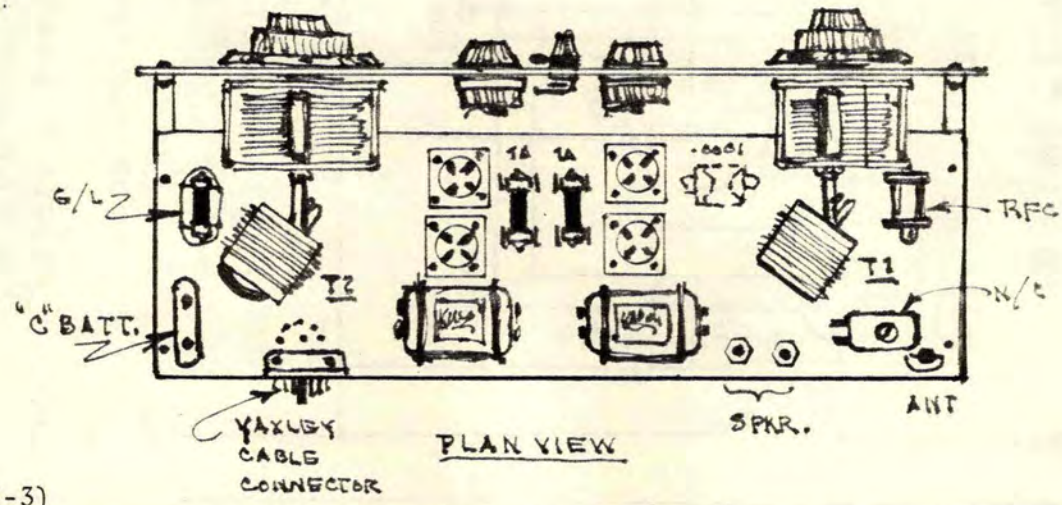

PLAN VIEW

(CB II-3)

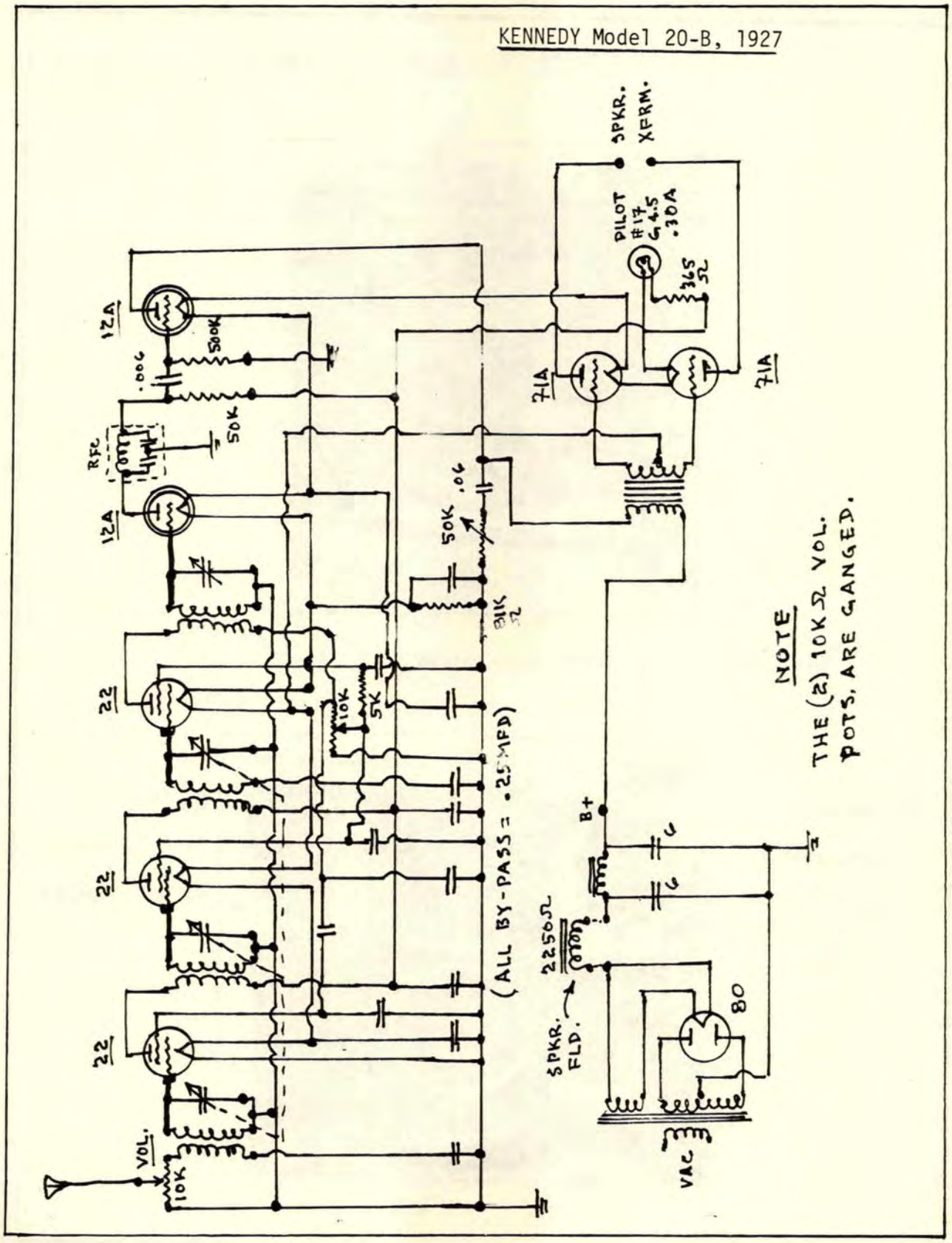
KENNEDY Model 20-B, 1927
SPKR.
XFRM.
PILOT #17 6.4.5 .30A
365 Ω
71A
71A
12A
12A
22
22
22
.006
500K
50K
RFC
50K .06
81K Ω
10K
5K
(ALL BY-PASS = .25 MFD)
B+
2250 Ω
SPKR. FLD.
80
VAC
VOL.
10K
NOTE
THE (2) 10K Ω VOL. POTS. ARE GANGED.

KENNEDY SHORT & LONG WAVE RECEIVER, 1931: Sht. 1

Going against the trend to super-hets, this was a T.R.F.

1. Tuning Knob.
2. Band-Switch.
3. Regeneration & VOL Control

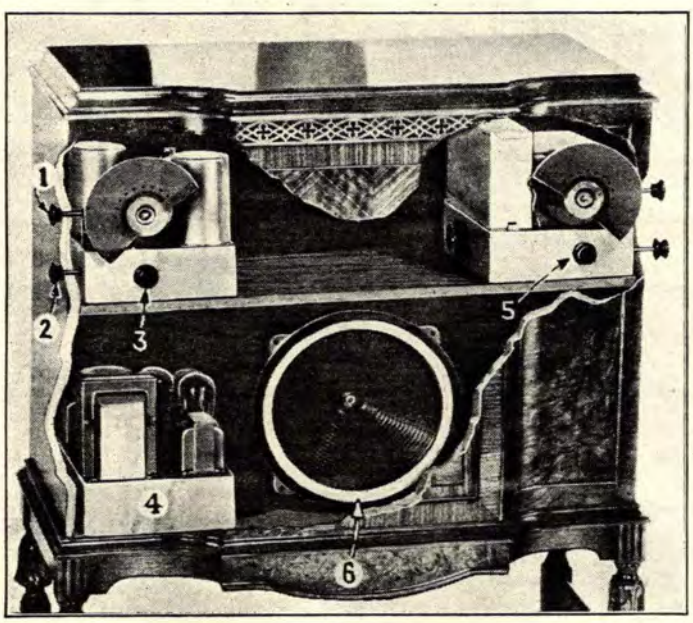

4. Power Pack.
5. B.C. Control.
6. Dyn. Speaker.

KENNEDY SHORT & LONG-WAVE RECEIVER, 1931: Sht. 2

The set depicted here was and is interesting on several counts, not the least of which is the date of its manufacture - 1931.

By 1931 the majority of set-manufacturers were rushing to produce super-hets, in all shapes, sizes, and prices. The set shown was not a super-het but a T.R.F., and a very elabourate one at that.

It contained three integral short-wave coils which covered the bands from 15 to 100 meters. Two of the coils were permanent within the receiver, and all were shielded. The third was a plug-in type coil, and allowed you to choose the range you wanted from a variety of other commercial coils.

There were four screen-grid RF stages, a power detector, an R-C audio amplifier, and a push-pull second AF stage, using a pait of 45s. A dual switch connected the ANT with the long or short-wave circuitry. A coil-selector switch was a 3-pole, 3-contact type, operated by a single knob on the panel.

The short-wave circuit has one stage of untuned RF ahead of a regenerative DET, and the Dynatron OSC used a screen-grid tube. The output was taken from the screen of the OSC tube, through a fixed condenser, as shown on the schematic sketch. The OSC frequency was approximately 1530 KC, but could be varied.

In operation the long-wave dial was placed at the output frequency of the OSC, and tuning was done with the short-wave single dial, together with the regeneration control.

Total tube complement was six screen-grid types, four being tuned amplifying tubes, and two AF tubes; with three screen-grid tubes in the short-wave circuitry. In essence, a unique and impressive example of the romance and the allure of early Radio.

* * *
* *
*

KENNEDY SHORT & LONG WAVE RECEIVER, 1931; Sht. 3

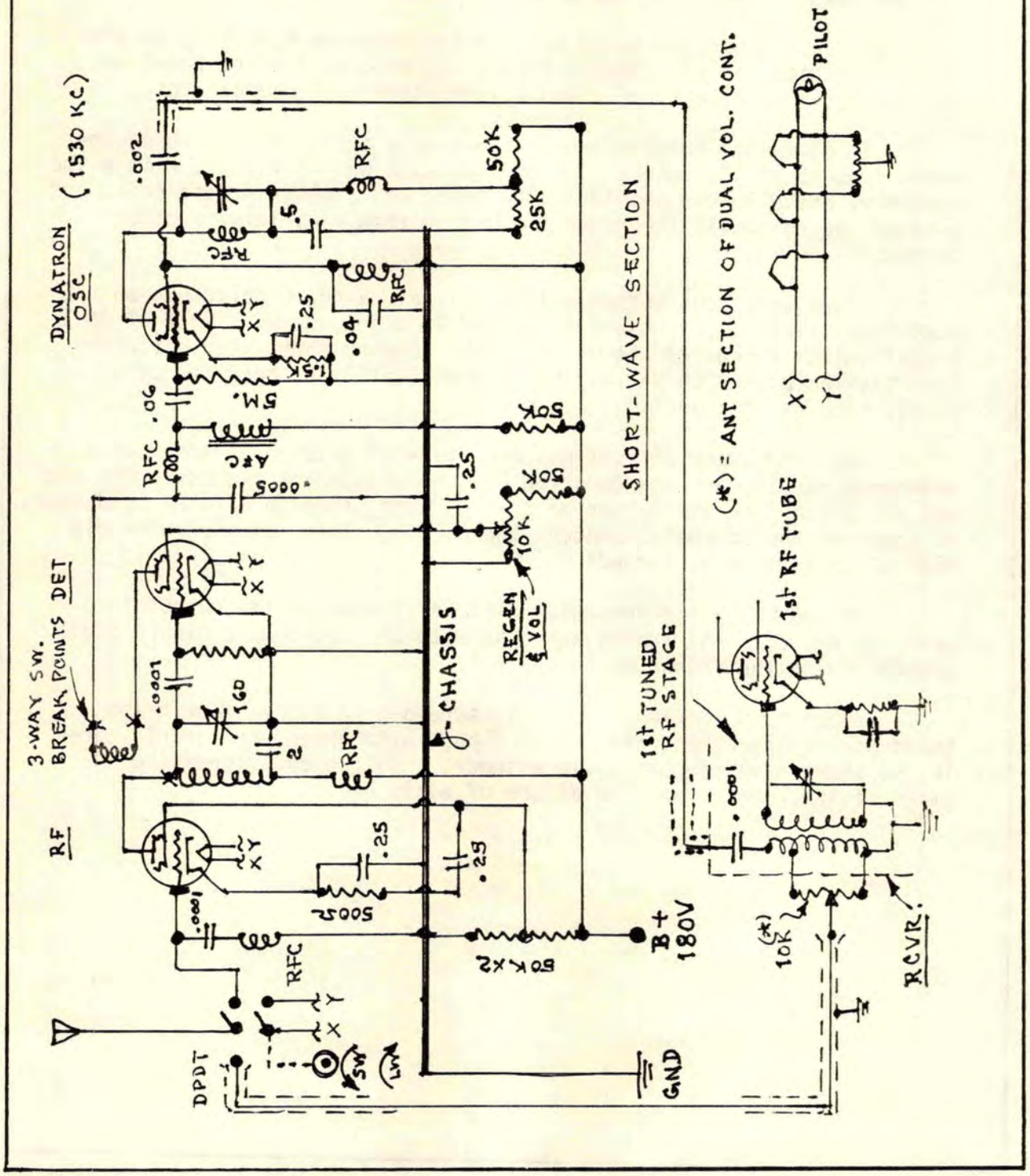

The Lodge "N" Receiver

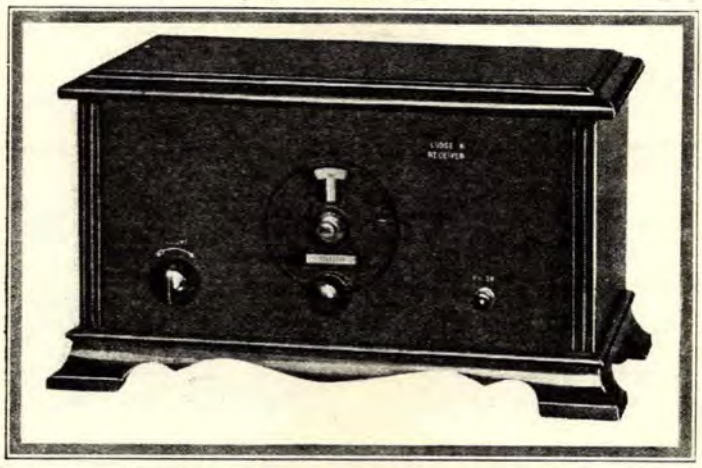

The "N" circuit of Sir Oliver Lodge was an extremely popular circuit in England for several years. It was the first circuit to utilise the multi-valve - or three tubes in one envelope. It required a special socket, a diagram of which is shown below with its connexions. While several tube manufacturers in the U.S. produced the multi-valve, it never really caught-on in the U.S., despite the obvious saving of the cost of two additional tubes. The multi-valve socket should not be confused with the mogul-type socket developed around the same time for adapting the new AC tubes to DC sets. In the following pages you will find three different layouts of the Lodge "N" circuit. All will work essentially the same - if you have the multi-valve and the "N" coil.

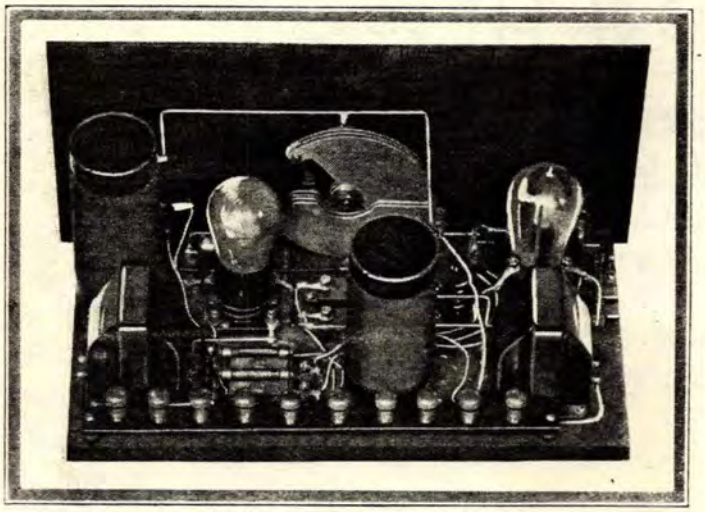

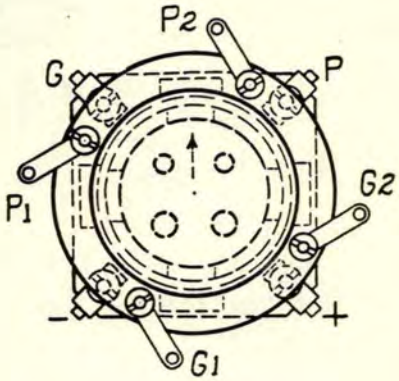

LODGE "N" MULTIVALVE RECEIVER; Sht. 2

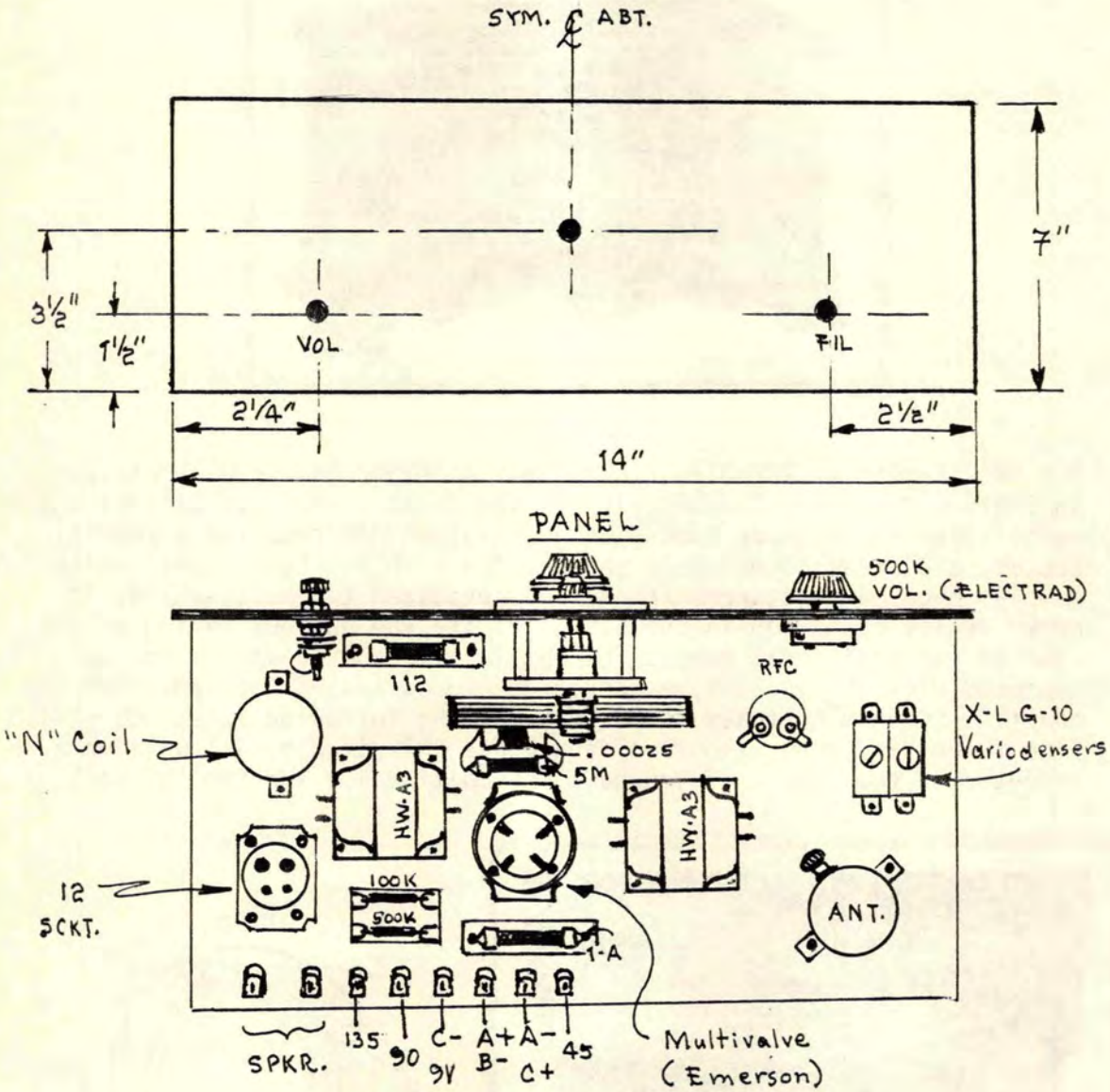

HW·A3 = SAMSON XFRMRS.
PRECISION "N" Variable (GP); 23 MMF.

(CB627)

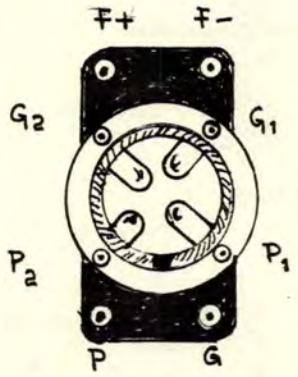

MULTIVALVE SOCKET PLAN

ADJUSTING THE LODGE "N" RECEIVER

1. Turn "Variodenser" #1 (nearest edge of baseboard) clockwise, but not tightly.
2. Turn "Variodenser" #2 counter-clockwise.
3. Close the plates of the variable.
4. Turn set on and let tubes warm-up.
5. DET should begin to oscillate.
6. Adjust "Variodenser" #1 CCW until oscillation ceases.
7. Rotate the variable through 180°. If oscillation set in at any point, make further adjustment of "Variodenser"#1.
8. Go back to the highest wavelength, and re-adjust "Variodenser"#2 to just below the point of oscillation.
9. Continue steps 1 through 8 until the circuit is maintainedjust below below the point of oscillation over the entire spectrum.
10. Make a final adjustment with "Variodenser"#2 by screwing it down just a bit more than required in the above steps; this will obviate distortion, generally.
11. The "Variodensers" need not be touched thereafter, unless you change your aerial (ANT).

NOTE:

This circuit was not designed for what was called DX in those days. It was primarily a local B.C. receiver of unusual selectivity and fine tone in congested areas of large cities.

LODGE "N-COIL" RECEIVER, 1927 : Sht. 4

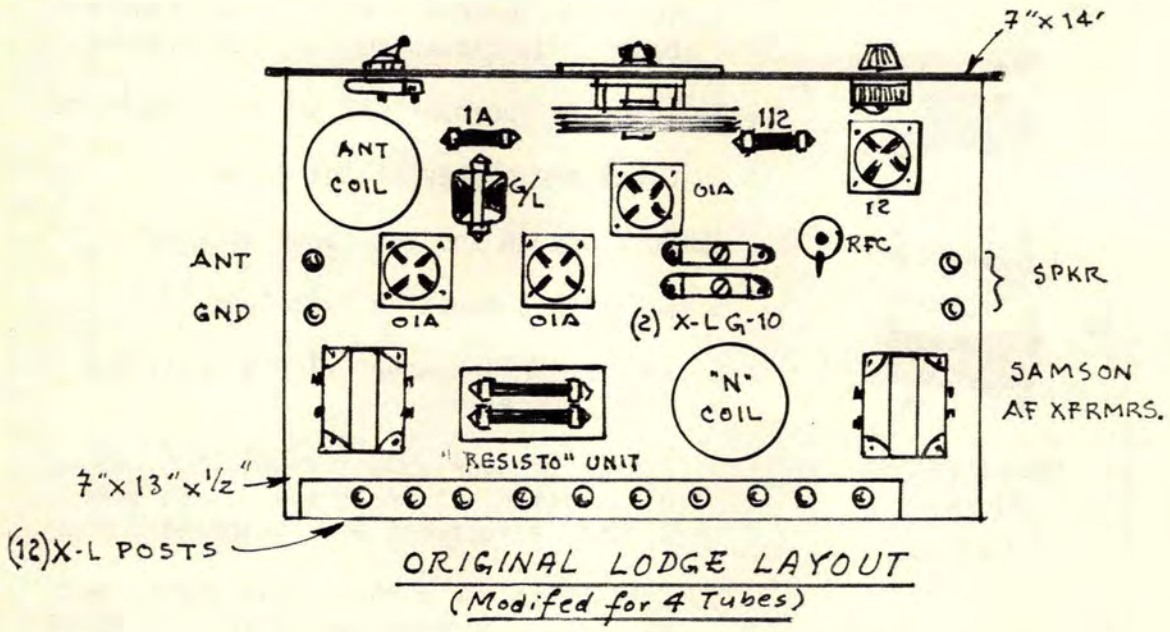

ORIGINAL LODGE LAYOUT
(Modifed for 4 Tubes)

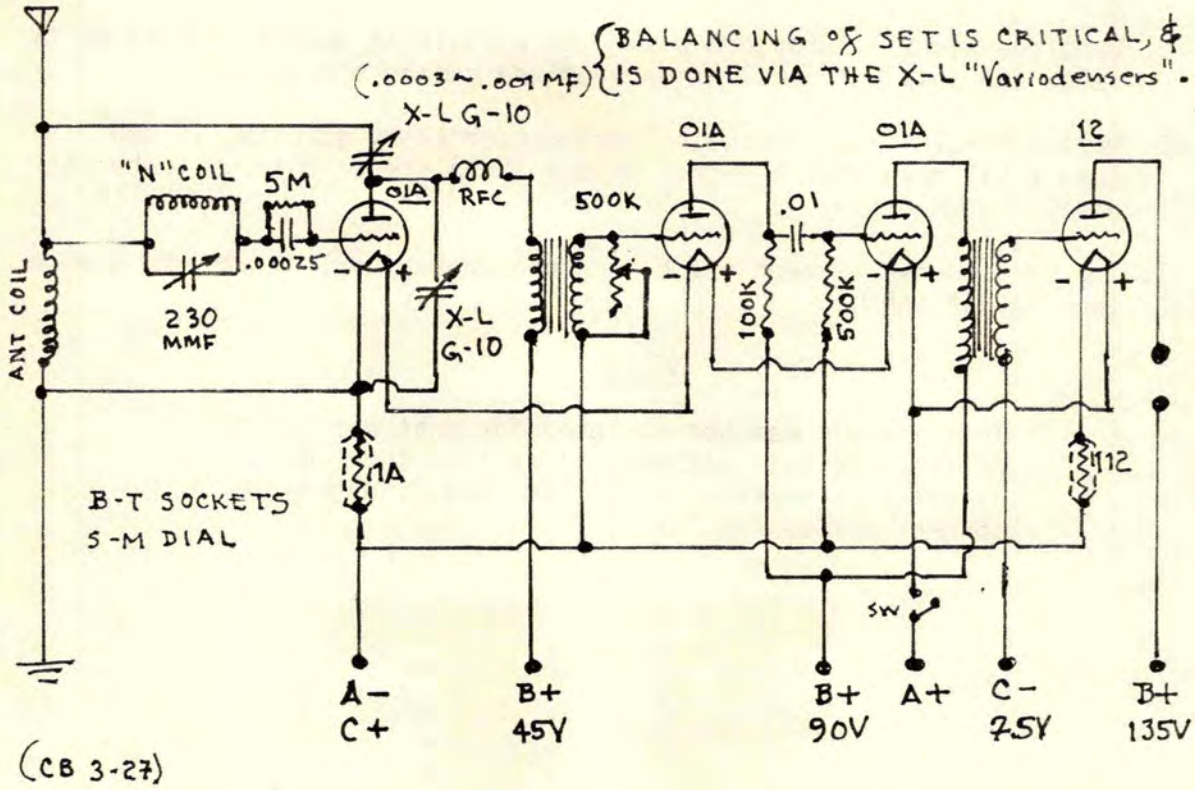

(CB 3-27)

LODGE "N" MULTIVALVE RECEIVER, 1927:Sht 5

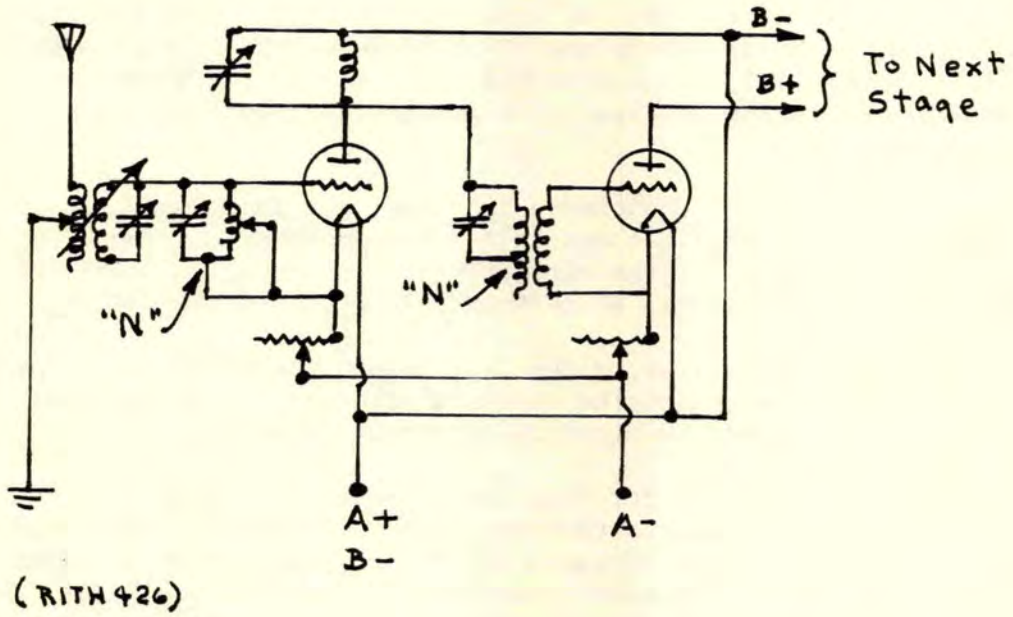

The original Lodge "N" Circuit has been shown on the preceding pages, but the "N" circuit, as an oscillator, could be connected in other ways; as depicted in the sketch above.

* * *

Stated briefly, the "N" circuit consisted of a free uncoupled, low-resistance circuit capable of precise tuning, and inserted between a tapt point to the ANT, and the grid of the first tube.

Hand-capacity was prevelant, and howling did occur in the phones during tuning, but the set did NOT radiate.

The midget variable shown in all sketches was of three plates, and the coil was of 150 turns of enamelled wire.

* * *
* *
*

THE LOFTIN-WHITE PRINCIPLE

The long enduring fame of Loftin and White rested primarily on their advances in AF circuitry, an ingeneous and innovative amplifying system , fully described in Volume IV of these SKETCH-BOOKS. After selling out to RCA in 1929 little more was heard of them, although what they had contributed to the art was being incorporated into many a commercial receiver.

But in 1926 they designed a TRF receiver, long forgotten by even the most avid Radio buff. It was called the Constant-Coupled B. C. Receiver. The peculiarities of the circuit were written-up in contemporary Radio media as "The Loftin-White Principle of Constant-Coupling".

The Principle turned on the established phenomenon that any coil and variable combination varied in value with any change in frequency, and that such changes occurred in in direct opposition.

By plotting curves for this variation and superimposing the resultant curves, it was apparent that they also compensated each other, so that if a combined coil and variable had their proportionate value correct, the resistance in the circuit would be practically constant irrespective of wavelength or frequency. That was heart of the Principle. The combination of coils and variables was such that the transferring of energy from one circuit to the other was the same at all wavelengths.

Constructional details of the Loftin-White Constant-Coupled receiver of 1926 will be found in the following pages. The use of hi-mu tubes was mandatory for RF amplification, as they did away with the use of regeneration. It was also essential that the FIL voltages were held to 5V. The virtues of the circuit were these:

1. It prevented oscillation and regeneration;
2. It handled all radio frequencies equally well;
3. It gave greater sensitivity, volume, selectivity, fidelity.

Having but one RF stage, the RF could be changed without putting any other circuit out of resonance. Changing the RF was done by PRI coil L1 being shunted by an adjustable condenser, shown as C6 on the following schematic. C6 could also be placed across the SEC, its placement being optional. C6 could also be used to eliminate squealling, which may occur when first turning on the set.

* * *
* *
*

LOFTIN-WHILE CONSTANT-COUPLED RECEIVER, 1927; Sht. 2

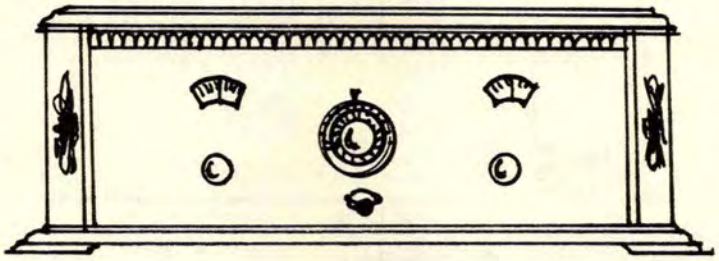

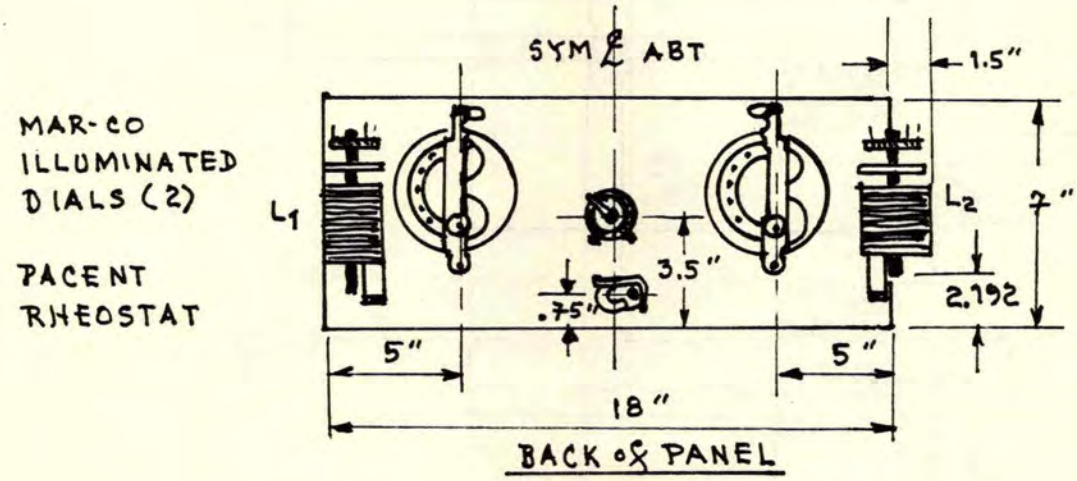

BACK of PANEL

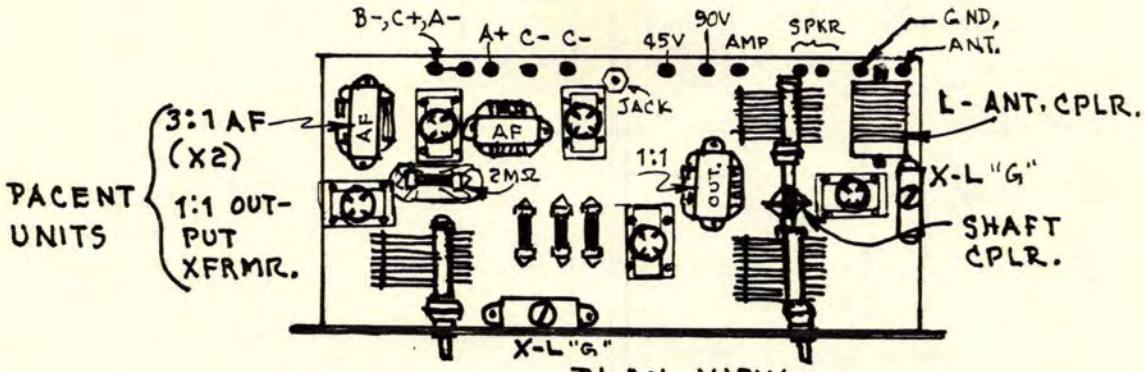

PLAN VIEW

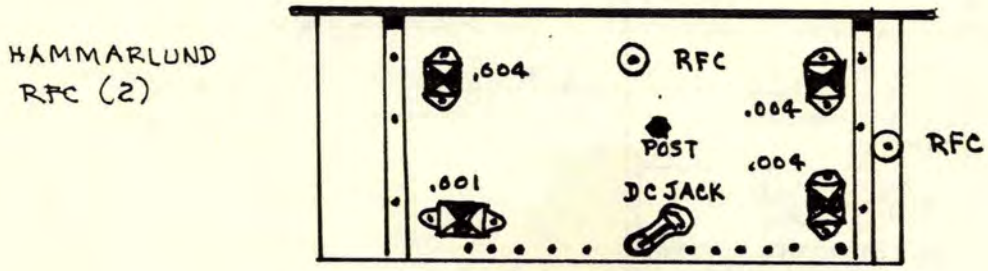

BOTTOM VIEW

LOFTIN-WHITE "CONSTANT-COUPLED" TRF, 1925

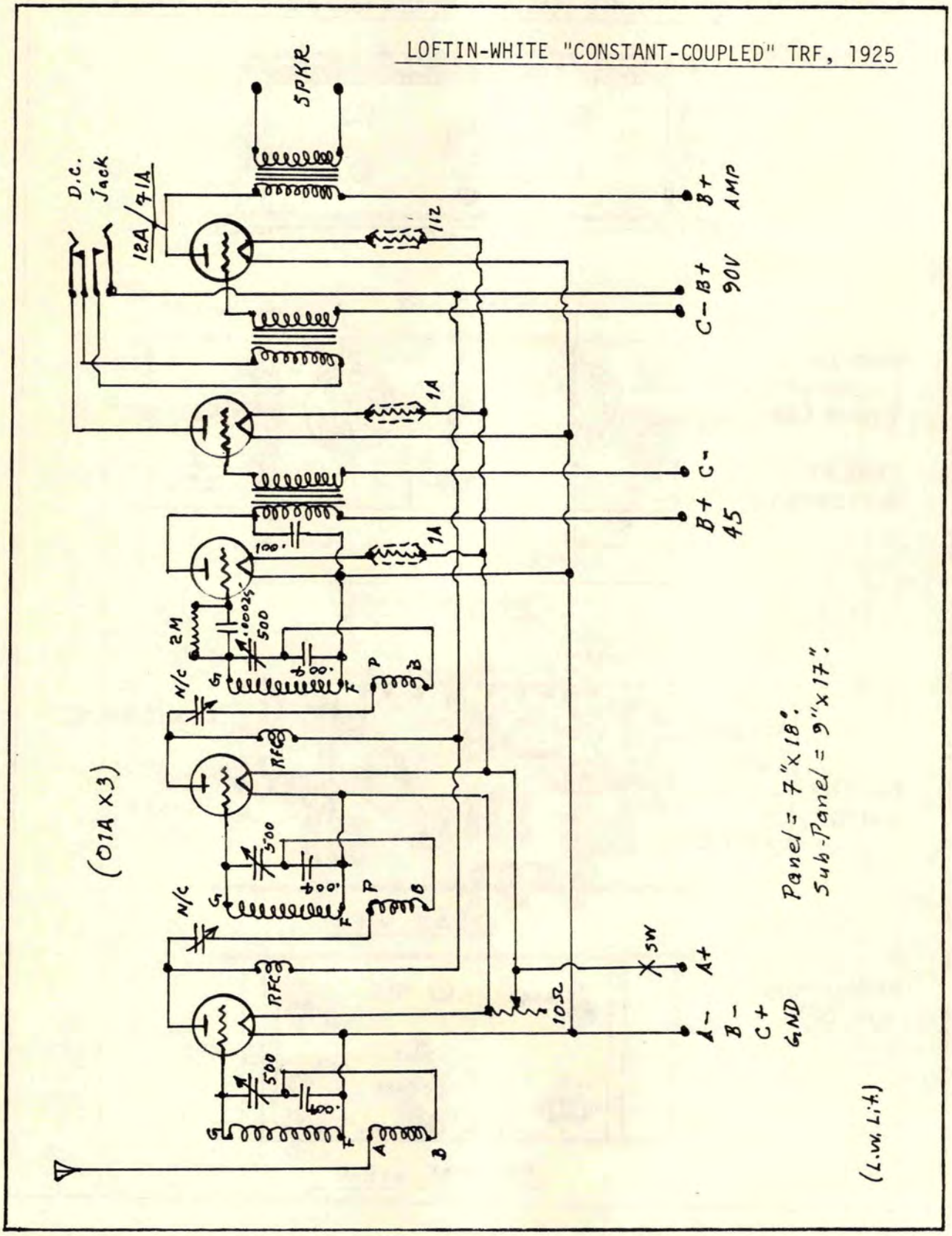

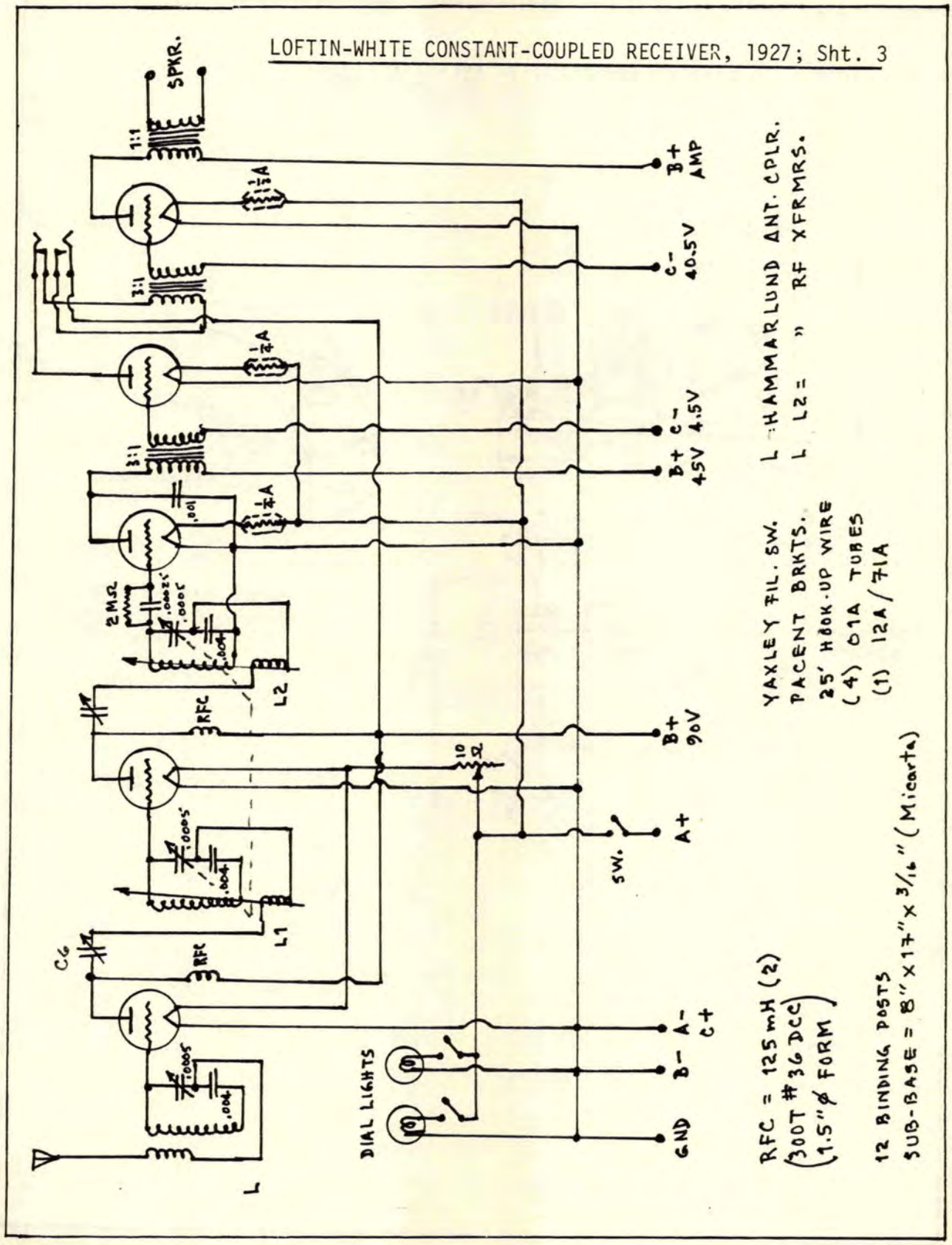
LOFTIN-WHITE CONSTANT-COUPLED RECEIVER, 1927; Sht. 3
SPKR.
1:1
3:1
3:1
1/2A
1/2A
1/2A
.001
2MΩ
.0005
.0005
.004
L2
RFC
10Ω
.0005
.004
L1
CG
RFC
.0005
.004
L
DIAL LIGHTS
SW.
B+ AMP
C- 40.5V
B+ C- 45V 4.5V
B+ 90V
A+
A-
C+
B-
GND
L = HAMMARLUND ANT. CPLR.
L L2 = " RF XFRMRS.
YAXLEY FIL. SW.
PACENT BRKTS.
25' HOOK-UP WIRE
(4) 01A TUBES
(1) 12A/71A
RFC = 125 mH (2)
(300T #36 DCC)
(1.5" ø FORM)
12 BINDING POSTS
SUB-BASE = 8" X 17" X 3/16" (Micarta)

ONE-TUBE REGENERATIVE RECEIVER, 1926;
CONNECTICUT TELEPHONE COMPANY

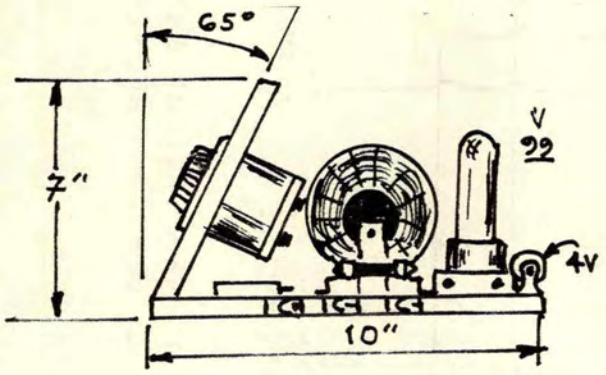

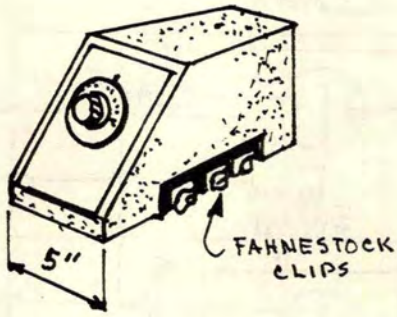

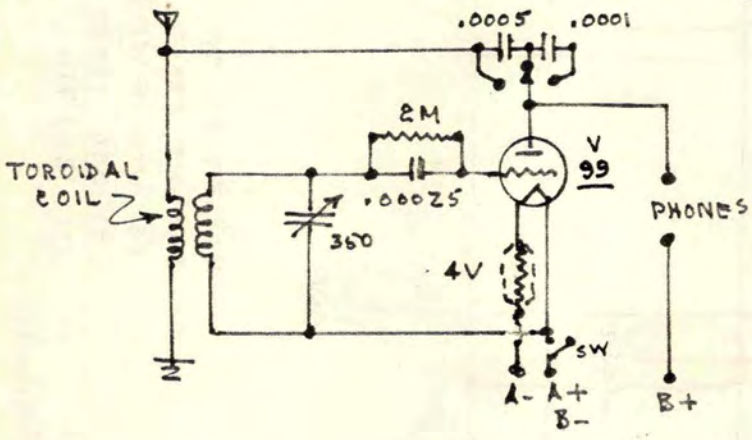

WOOD BASE & PANEL.
METAL ENCLOSURE.

NOTES

OTHER WRITINGS BY D.H.MOORE

Literary Autobiography:

All Our Days Were Autumn, Vol. I.
The Köln Manuscripts, Vol. II.
The Peregrine Years, Vol. III.

Photographic Philosophy:

The Face of Modern Photography.
The Practice of Modern Photography.
Selected Photographic Writings.
Selected Photographic Interviews.

Vintage Radio As Sociology:

Vintage Radio I.D. Sketch-Books (10 Vols.)
Monographs on Specific Marques (14)
The Sociology of Early Radio.

Miscellaneous Writings:

Literary Correspondence.
Selected Technical Writings.
Youthful Verse & Shibboleths.
Literary Biographic Sketches.
Lilitchika: A Lost & Lonely Love.
Selected Short Stories.

Contemporary Novels:

Malibu '54.
Kashmiri Song.
Madras.
Khiva.
The Impotent Idol.
The Perimeter of Grace.
Dierdre.

Coffee-Table Picture Books:

Greenwich Village As It Was.
Germany's Psychic Landscape.
The Ireland That Never Was.

Beyond Rider!

The author and the publishers take pleasure in announcing that Howard W. Granoff has been selected as the exclusive distributor for United States sales of these unique Sketch-Books and Monographs, and other related writings of the author - D.H.MOORE.

Comments and suggestions from readers of these dedicated works are always welcome, and will be given an immediate hearing, with an eye to improving future editions. While these unique Sketch-Books and Monographs are the labour of one man, the vintage radio hobby remains, as with any legitimate hobby, a shared enthusiasm. These works, then, are a sharing of one man's affection for vintage radio.

Olde Tyme Radio Co.

2445 LYTTONSVILLE RD.

SILVER SPRING, MD.-20910

(301) 585-8776

OTHER PUBLICATIONS AVAILABLE

THE VINTAGE RADIO IDENTIFICATION SKETCH-BOOKS of D.H.MOORE:

Vol. I	- *INTRODUCTORY ESSAYS*	$23.50
Vol. II	- *BROADCAST RECEIVERS (2VOL.)*	49.95
Vol. III	- *SHORT-WAVE RECEIVERS*	23.50
Vol. IV	- *POWER SUPPLIES & AMPLIFIERS*	23.50
Vol. V	- *HARDWARE & ACCESSORIES*	23.50
Vol. VI	- *EARLY TEST EQUIPMENT*	20.95
Vol. VII	- *GENERAL TECHNICAL DATA*	23.50
Vol. VIII	- *THE EARLY YEARS: 1910-1925*	23.50

SPECIALISED PUBLICATIONS:

THE RCA CATACOMBS: *A Practical Treatise*	$16.50
THE MYSTERIOUS REFLEX	22.50
RESISTANCE-COUPLED AF AMPLIFIERS TREATISE	15.25
SUPER-HETS OF THE TWENTIES	26.95

MONOGRAPHS ON INDIVIDUAL MARQUES: $16.50, Each.

PILOT	*BREMER-TULLY*	*ULTRADYNE*
SCOTT(Early)	*INFRADYNE*	*STROBODYNE*
REMLER/BEST	*VICTOREEN*	*SILVER-MARSHALL*
SARGENT-RAYMENT	*BROWNING-DRAKE*	*HAMMARLUND/NATL*

Other MONOGRAPHS are in preparation and will be announced. Prices subject to change without notice. All books are shipt post-paid within the continental United States.For additional information, to place orders, etc., contact the publishers or OLDE TYME RADIO CO., 2445 Lyttonsville Rd., Silver Spring, Maryland - 20910.

The Editorial Group, Ltd.

D.H. MOORE, ADI
DIRECTOR

"Specialists In Technical Documentations"

P.O. BOX 521
PALO ALTO CALIF.
94302

OTHER PUBLICATIONS AVAILABLE

THE VINTAGE RADIO IDENTIFICATION SKETCH-BOOKS of D.H.MOORE:

Vol. I	- *INTRODUCTORY ESSAYS*	$23.50
Vol. II	- *BROADCAST RECEIVERS (2VOL.)*	49.95
Vol. III	- *SHORT-WAVE RECEIVERS*	23.50
Vol. IV	- *POWER SUPPLIES & AMPLIFIERS*	23.50
Vol. V	- *HARDWARE & ACCESSORIES*	23.50
Vol. VI	- *EARLY TEST EQUIPMENT*	20.95
Vol. VII	- *GENERAL TECHNICAL DATA*	23.50
Vol. VIII	- *THE EARLY YEARS: 1910-1925*	23.50

SPECIALISED PUBLICATIONS:

THE RCA CATACOMBS: *A Practical Treatise*	$16.50
THE MYSTERIOUS REFLEX	23.50
RESISTANCE-COUPLED AF AMPLIFIERS TREATISE	15.25
SUPER-HETS OF THE TWENTIES	26.95

MONOGRAPHS ON INDIVIDUAL MARQUES: $16.50, Each.

PILOT	*BREMER-TULLY*	*ULTRADYNE*
SCOTT(Early)	*INFRADYNE*	*STROBODYNE*
REMLER/BEST	*VICTOREEN*	*SILVER-MARSHALL*
SARGENT-RAYMENT	*BROWNING-DRAKE*	*HAMMARLUND/NATL*

Other MONOGRAPHS are in preparation and will be announced. Prices subject to change without notice. All books are shipt post-paid within the continental United States.For additional information, to place orders, etc., contact the publishers or OLDE TYME RADIO CO., 2445 Lyttonsville Rd., Silver Spring, Maryland - 20910.

The Editorial Group, Ltd.

D.H. MOORE, ADI
DIRECTOR

"Specialists In Technical Documentations"

P.O. BOX 521
PALO ALTO, CALIF.
94302